AD-A122 123 CABS: COMMAND AUTOMATED BUDGET SYSTEM COMPUTER OPERATION MANUAL(U) ARMY COMPUTER SYSTEMS COMMAND SUPPORT GROUP ATLANTA FORT GILL... 01 DEC 81 1/3

UNCLASSIFIED ADSM-18-C1D-AUD-IBM-OM DOD/DF-83/001A F/G 9/2 NL

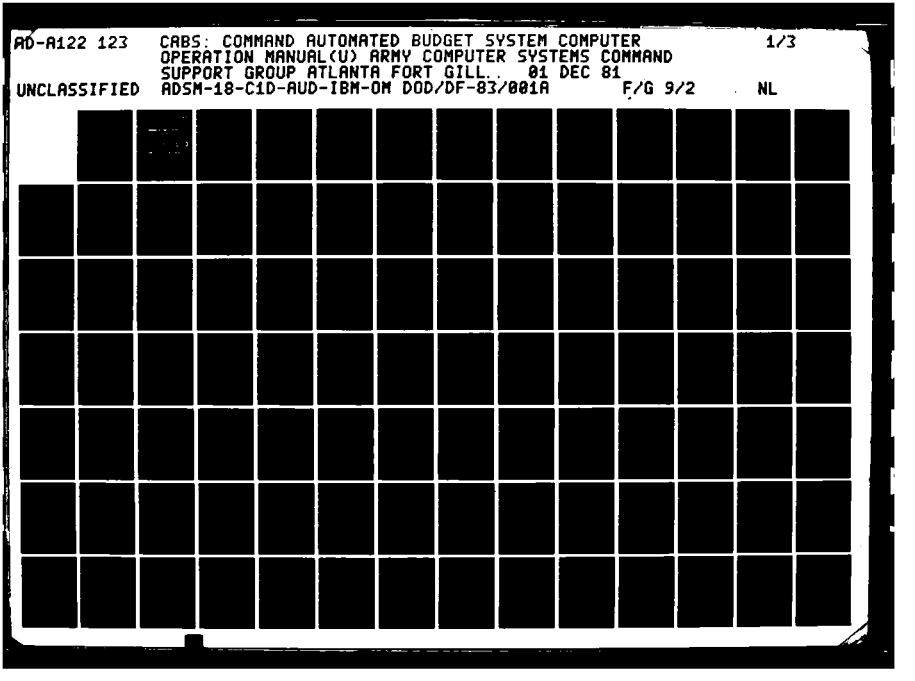

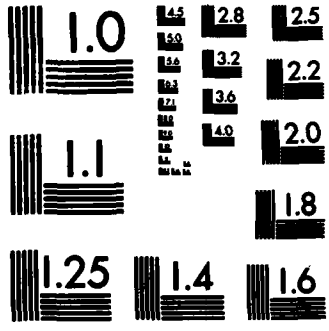

MICROCOPY RESOLUTION TEST CHART
NATIONAL BUREAU OF STANDARDS-1963-A

AD A122123

ADSM 18-C1D-AUD-IBM OM

AUTOMATED DATA SYSTEMS MANUAL

COMMAND AUTOMATED BUDGET SYSTEM

(CABS)

DTIC
ELECTE
DEC 3 1982
S D
A

COMPUTER OPERATION MANUAL

This document has been approved for public release and sale; its distribution is unlimited.

DTIC FILE COPY

UNITED STATES ARMY COMPUTER SYSTEMS COMMAND
FORT BELVOIR, VA. 22060

1 DECEMBER 1981

82 12 03 083

50272-101

REPORT DOCUMENTATION PAGE	1. REPORT NO. DOD/DF-83/001a	2.	3. Recipient's Accession No

4. Title and Subtitle

CABS: Command Automated Budget System,
Computer Operation Manual

5. Report Date
December 1981

6.

7. Author(s)

8. Performing Organization Rept. No.
USSM 18-CID-AUD-IBM OM

9. Performing Organization Name and Address

U.S. Army Computer Systems Command
ATTN: ACSC-SGA
Fort Gillem - Bldg. 906
Forest Park, GA 30050

10. Project/Task/Work Unit No.

11. Contract(C) or Grant(G) No.
(C)
(G)

12. Sponsoring Organization Name and Address

(same)

13. Type of Report & Period Covered

14

15. Supplementary Notes

For magnetic tape, see

16. Abstract (Limit: 200 words)

CABS is a standard automated system designed for use by major commands (MACOMs) and installations in mechanizing budget reporting. The objective of this Computer Operation Manual is to provide computer control and computer operator personnel with a detailed operational description of the system and its associated environment with which they will be concerned during the performance of their duties.

17. Document Analysis a. Descriptors

Budget
Budget System
Accounts

b. Identifiers/Open-Ended Terms

c. COSATI Field/Group

18. Availability Statement:	19. Security Class (This Report) UNCLASSIFIED	21. No. of Pages
	20. Security Class (This Page) UNCLASSIFIED	22. Price

COMPUTER OPERATION MANUAL

TABLE OF CONTENTS

		Page
SECTION 1.	GENERAL	1-1
1.1	Purpose of the Computer Operation Manual	1-1
1.2	Project References	1-1
1.3	Terms and Abbreviations	1-1
SECTION 2.	SYSTEM OVERVIEW	2-1
2.1	System Application	2-1
2.2	System Organization	2-1
2.3	Program Inventory	2-1
2.4	File Inventory	2-1
2.5	Processing Overview	2-1
2.6	Security and Privacy	2-1
SECTION 3.	DESCRIPTION OF RUNS	3-1
3.1	Run Inventory	3-1
3.2	Phasing	3-1
3.3	Run Description AUDTØA	3-5
3.3.1	Control Inputs	3-5
3.3.2	Management Information	3-5
3.3.3	Input-Output Files	3-5
3.3.4	Output Reports	3-5
3.3.5	Reproduced Output Reports	3-5
3.3.6	Restart/Recovery Procedures	3-5
3.4	Run Description AUDTØ1	3-19
3.4.1	Control Inputs	3-19
3.4.2	Management Information	3-19
3.4.3	Input-Output Files	3-19
3.4.4	Output Reports	3-19
3.4.5	Reproduced Output Reports	3-19
3.4.6	Restart/Recovery Procedures	3-19
3.5	Run Description AUDTØ2	3-33
3.5.1	Control Inputs	3-33
3.5.2	Management Information	3-33
3.5.3	Input-Output Files	3-33
3.5.4	Output Reports	3-33
3.5.5	Reproduced Output Reports	3-33
3.5.6	Restart/Recovery Procedures	3-33

Supersedes ADSM 18-C1D-AUD-IBM OM, dated 1 Jan 81

		Page
3.6	Run Description AUDTØ3	3-51
3.6.1	Control Inputs	3-51
3.6.2	Management Information	3-51
3.6.3	Input-Output Files	3-51
3.6.4	Output Reports	3-51
3.6.5	Reproduced Output Reports	3-51
3.6.6	Restart/Recovery Procedures	3-51
3.7	Run Description AUDTØ4	3-73
3.7.1	Control Inputs	3-73
3.7.2	Management Information	3-73
3.7.3	Input-Output Files	3-73
3.7.4	Output Reports	3-73
3.7.5	Reproduced Output Reports	3-73
3.7.6	Restart/Recovery Procedures	3-73
3.8	Run Description AUDTØ5	3-99
3.8.1	Control Inputs	3-99
3.8.2	Management Information	3-99
3.8.3	Input-Output Files	3-99
3.8.4	Output Reports	3-99
3.8.5	Reproduced Output Reports	3-99
3.8.6	Restart/Recovery Procedures	3-99
3.9	Run Description AUDTØ6	3-109
3.9.1	Control Inputs	3-109
3.9.2	Management Information	3-109
3.9.3	Input-Output Files	3-109
3.9.4	Output Reports	3-109
3.9.5	Reproduced Output Reports	3-109
3.9.6	Restart/Recovery Procedures	3-109
3.10	Run Description AUDMØ7	3-127
3.10.1	Control Inputs	3-127
3.10.2	Management Information	3-127
3.10.3	Input-Output Files	3-127
3.10.4	Output Reports	3-127
3.10.5	Reproduced Output Reports	3-127
3.10.6	Restart/Recovery Procedures	3-127
3.11	Run Description AUDM15	3-137
3.11.1	Control Inputs	3-137
3.11.2	Management Information	3-137
3.11.3	Input-Output Files	3-137
3.11.4	Output Reports	3-137
3.11.5	Reproduced Output Reports	3-137
3.11.6	Restart/Recovery Procedures	3-137

		Page
3.12.	Run Description AUDM2Ø	3-147
3.12.1	Control Inputs	3-147
3.12.2	Management Information	3-147
3.12.3	Input-Output Files	3-147
3.12.4	Output Reports	3-147
3.12.5	Reproduced Output Reports	3-147
3.12.6	Restart/Recovery Procedures	3-147
3.13	Run Description AUDM14	3-167
3.13.1	Control Inputs	3-167
3.13.2	Management Information	3-167
3.13.3	Input-Output Files	3-167
3.13.4	Output Reports	3-167
3.13.5	Reproduced Output Reports	3-167
3.13.6	Restart/Recovery Procedures	3-167

LIST OF FIGURES AND ATTACHMENTS

Figure		Page
2.2-01	System Organization	2-2
2.3-01	Program Inventory	2-7
2.4-01	File Inventory	2-8
2.5-01	Cycle Summary AUDØA	2-10
2.5-02	Cycle Summary AUDØ1	2-11
2.5-03	Cycle Summary AUDØ2	2-13
2.5-04	Cycle Summary AUDØ3	2-14
2.5-05	Cycle Summary AUDØ4	2-15
2.5-06	Cycle Summary AUDØ5	2-16
2.5-07	Cycle Summary AUDØ6	2-17
2.5-08	Cycle Summary AUDØ7	2-18
2.5-09	Cycle Summary AUD14	2-19
2.5-10	Cycle Summary AUD15	2-20
2.5-11	Cycle Summary AUD2Ø	2-21
3.1-01	Run Inventory	3-2
3.3-01	Run Description AUDTØA	3-6
3.4-01	Run Description AUDTØ1	3-20
3.5-01	Run Description AUDTØ2	3-34
3.6-01	Run Description AUDTØ3	3-52
3.7-01	Run Description AUDTØ4	3-74
3.8-01	Run Description AUDTØ5	3-100
3.9-01	Run Description AUDTØ6	3-110
3.10-01	Run Description AUDMØ7	3-128
3.11-01	Run Description AUDM15	3-138
3.12-01	Run Description AUDM2Ø	3-148
3.13-01	Run Description AUDM14	3-168

Attachment		Page
1	Job Control Statements To Produce DYNAM/T Tape Pull Lists	A1-1 thru A1-8

SECTION 1. GENERAL

1.1 Purpose of the Computer Operation Manual. The objective of this Computer Operation Manual for COMMAND AUTOMATED BUDGET SYSTEM (CABS), System ID Code - AUD, is to provide computer control and computer operator personnel with a detailed operational description of the system and its associated environment with which they will be concerned during the performance of their duties.

1.2 Project References.

Document Identifier	Document Title	Source	Scty Class	Priv
USACSC Manual 18-1-B-AUD, Vol II	Command Automated Budget System (CABS) User Manaual	HQ USA FORSCOM (AFCO-IS)	UNCLAS	No

1.3 Terms and Abbreviations. There are no terms, definitions or acronyms unique to this document, that are subject to interpretation by the user of the document.

SECTION 2. SYSTEM OVERVIEW

2.1 System Application. CABS was originally designed as the vehicle for processing mechanized budget submissions, through channels, to Department of the Army. Although DA has not required a mechanized submission since 1975, the system is effectively utilized at MACOM to process installation data for those manual schedules of a major budget submission which lend themselves to mechanization. Such mechanization is essential to allow for processing budget submissions in the compressed time-frame allotted. The design of the system affords great flexibility in assembling and manipulating data which has led to its modification and use for reporting other than a budget submission.

2.2 System Organization. Reference Figure 2.2-01.

2.3 Program Inventory. Reference Figure 2.3-01.

2.4 File Inventory. Reference Figure 2.4-01.

2.5 Processing Overview. Reference Figures 2.5-01, 2.5-02, 2.5-03, 2.5-04, 2.5-05, 2.5-06, 2.5-07, 2.5-08, 2.5-09 and 2.5-10.

2.6 Security and Privacy. All programs used by and all files affected by the CABS system are unclassified and have no privacy restrictions.

LOGIC CHART
For use of this form, see TB 18-111; the proponent agency is CSA.

1. DATE: 811201

2. ID: AUD

3. TITLE: SYSTEM ORGANIZATION

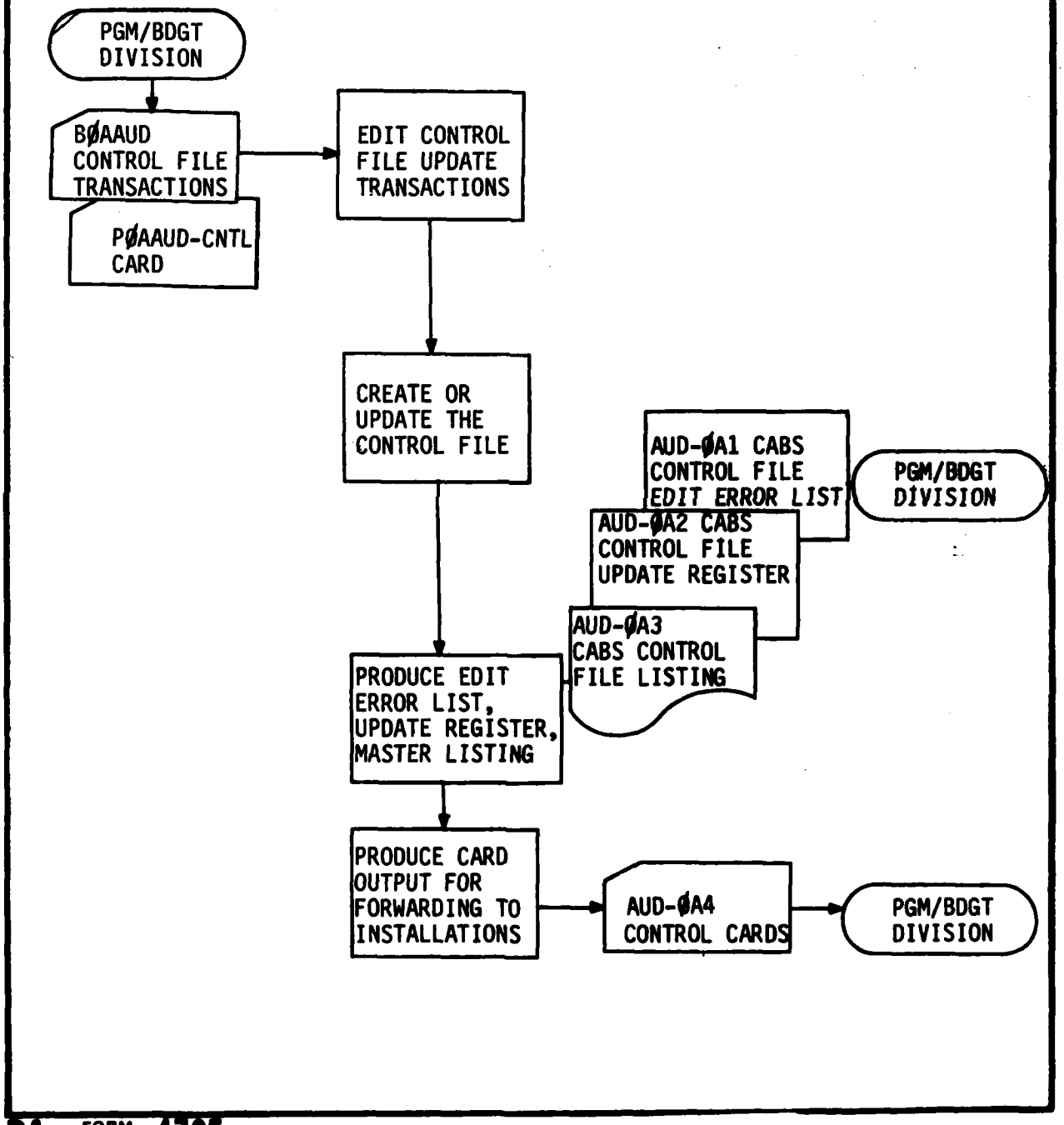

DA FORM 1 NOV 78 4735

Figure 2.2-01

LOGIC CHART
For use of this form, see TB 18-111; the proponent agency is CSA.

1. DATE: 811201

2. ID: AUD

3. TITLE: SYSTEM ORGANIZATION (CONTINUED)

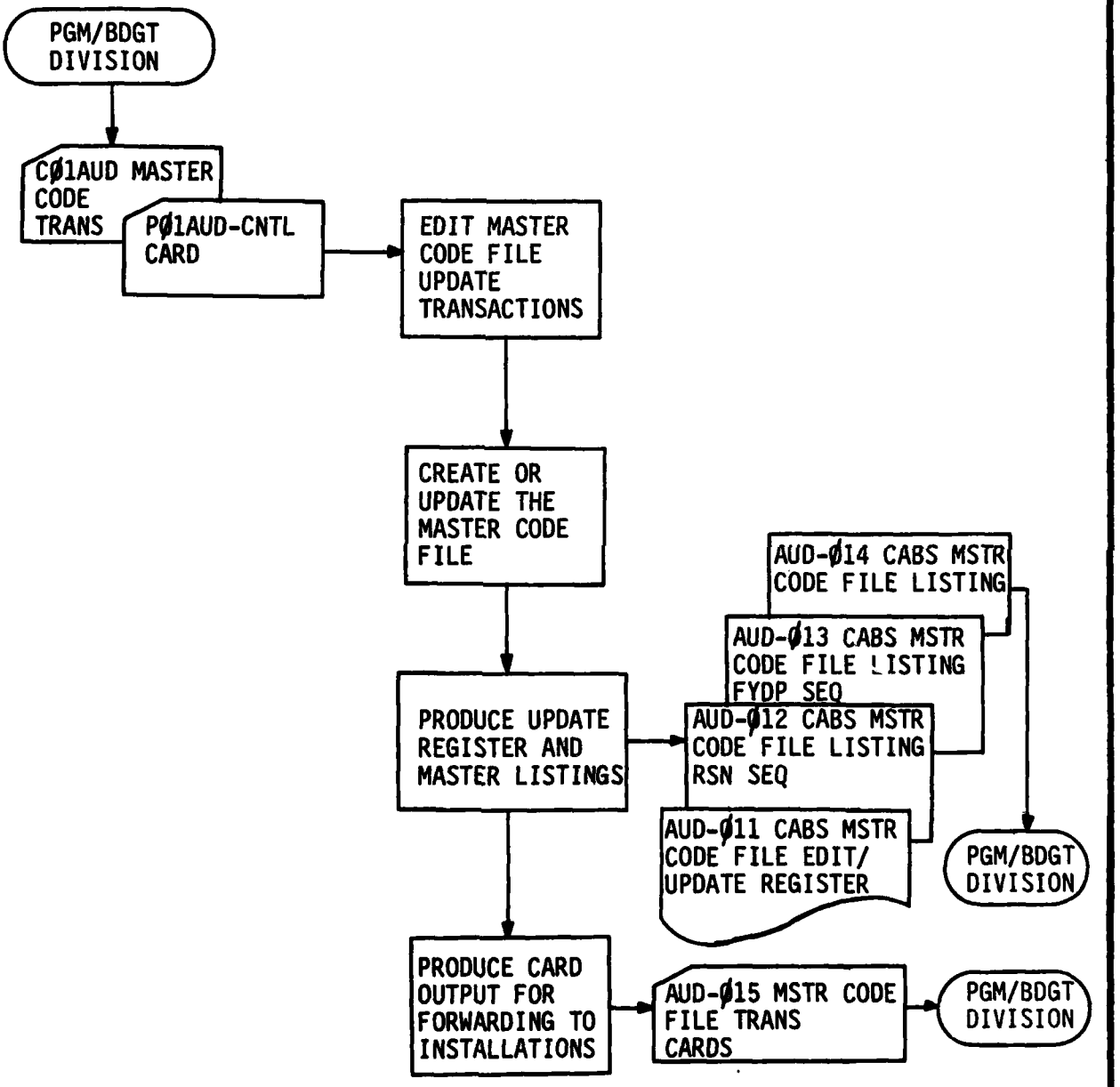

DA FORM 1 NOV 78 4735

Figure 2-

LOGIC CHART
For use of this form, see TB 18-111; the proponent agency is CSA.

1. DATE: 811201

2. ID: AUD

3. TITLE: SYSTEM ORGANIZATION (CONTINUED)

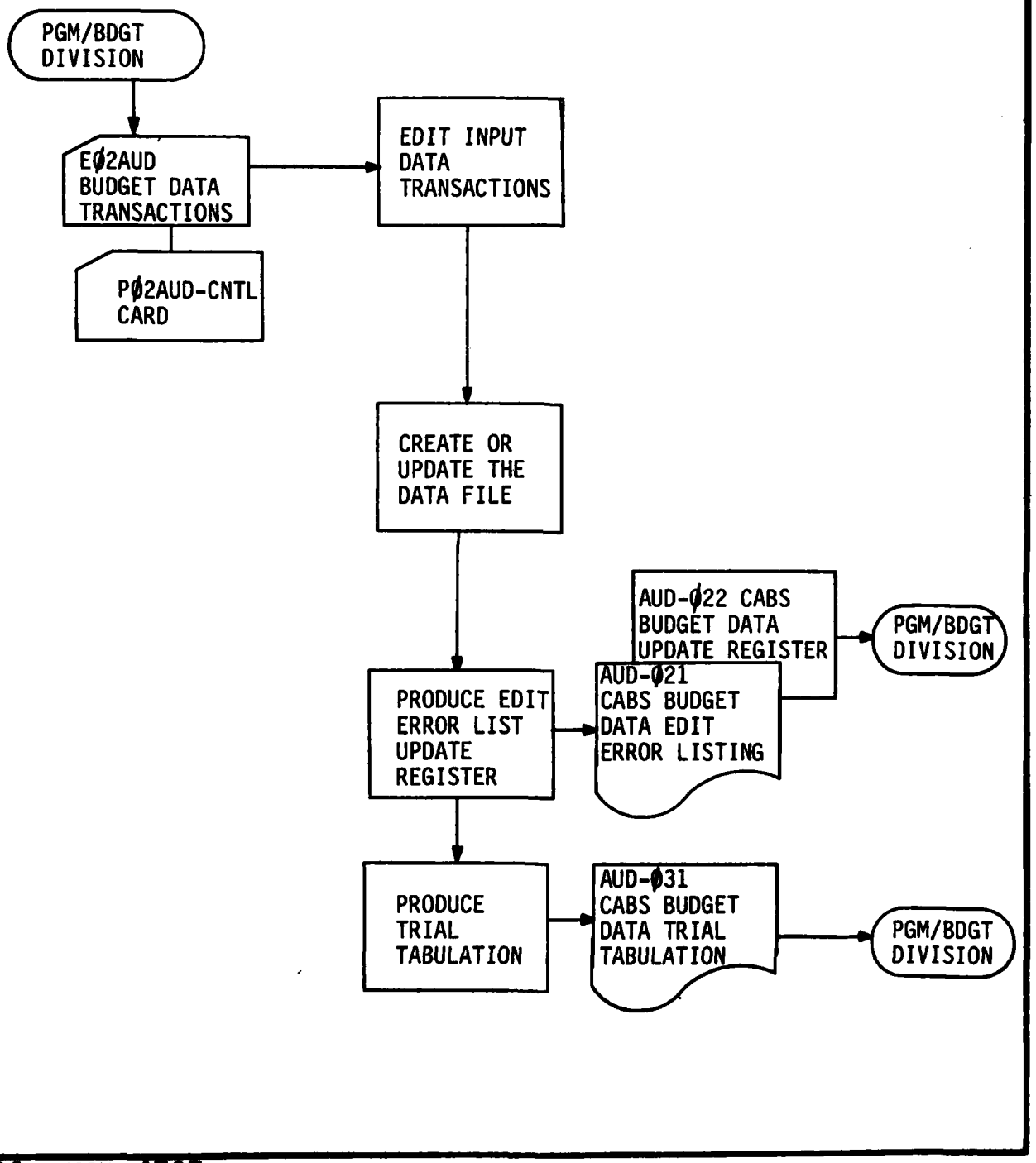

DA FORM 1 NOV 78 4735

Figure 2.2-01

LOGIC CHART
For use of this form, see TB 18-111; the proponent agency is CSA.

1. DATE 811201

AUD

3. TITLE SYSTEM ORGANIZATION (CONTINUED)

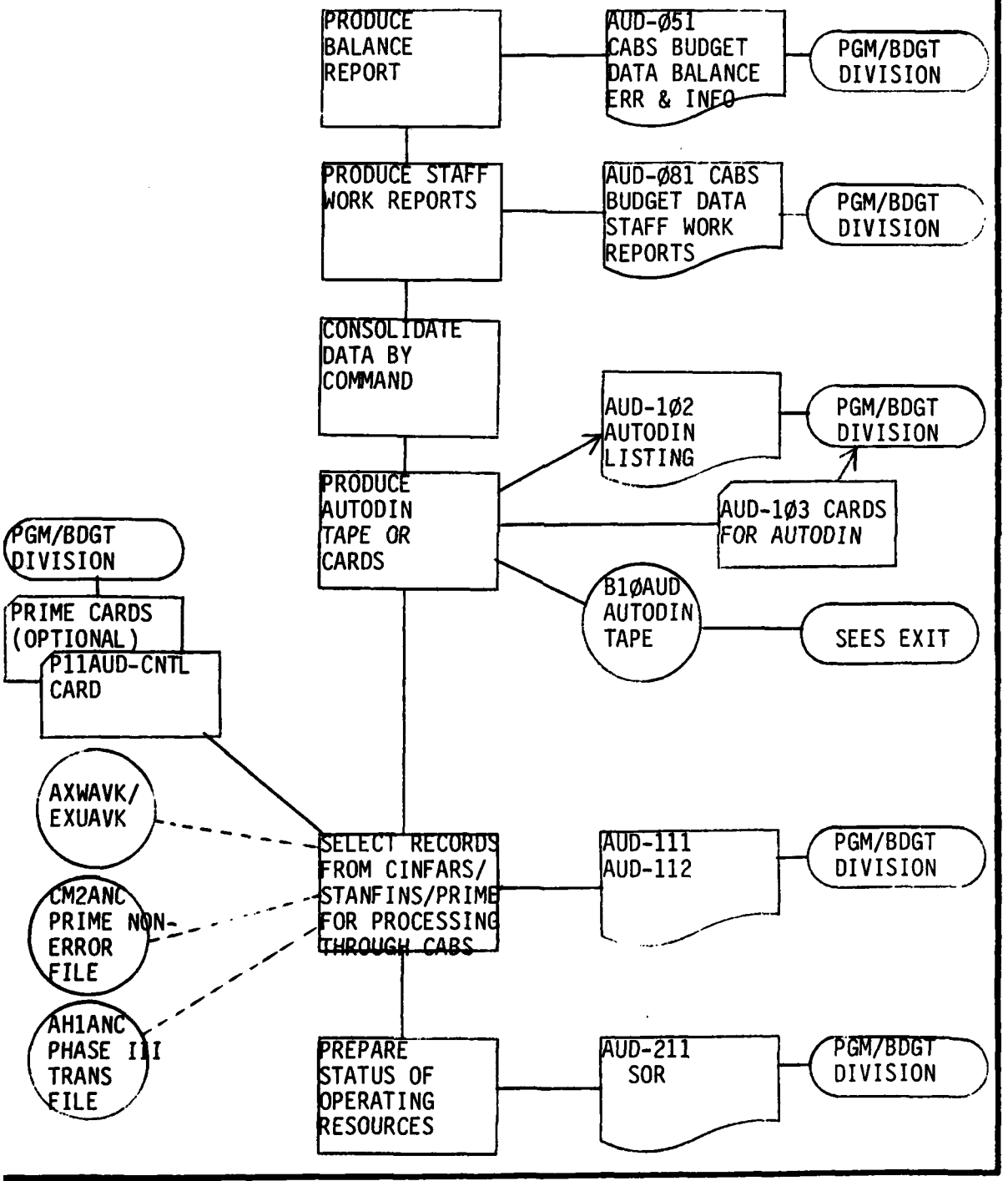

FORM 1 NOV 78 4735

Figure 2.2-01

LOGIC CHART For use of this form, see TB 18-111; the proponent agency is CSA.	1. DATE 811201
D AUD	3. TITLE SYSTEM ORGANIZATION (CONTINUED)

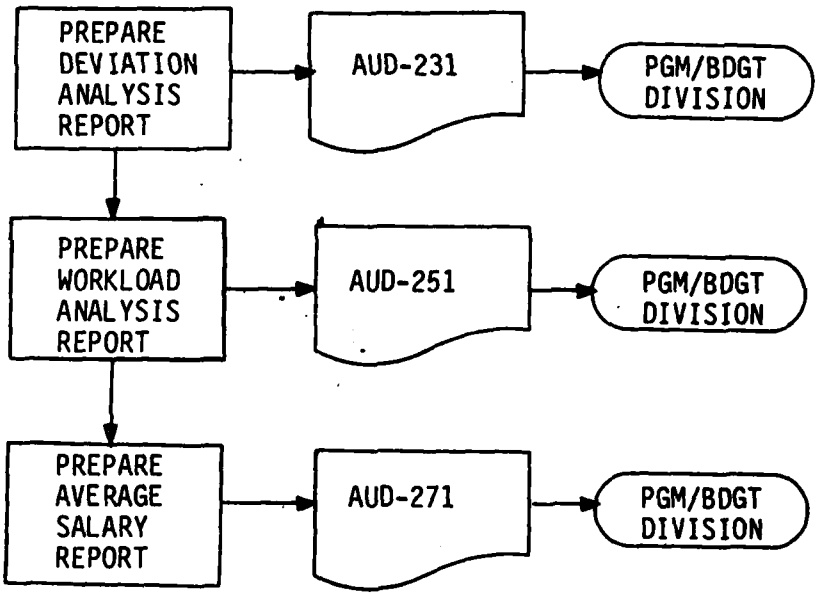

FORM 1 NOV 78 4735

Figure 2.2-01

PROGRAM INVENTORY

PROGRAM ID	PROGRAM NAME	SECURITY CLASS	PRIVACY
IEBGENER	Utility Tape To Disk	UNCLAS	No
PØAAUD	CABS Control File Edit/Update	UNCLAS	No
PØ1AUD	Master Code File Edit/Update	UNCLAS	No
PØ2AUD	CABS Budget Data Edit/Update	UNCLAS	No
PØ3AUD	CABS Trial Tabulation	UNCLAS	No
PØ4AUD	Balance Data Extraction	UNCLAS	No
PØ5AUD	Balance Report	UNCLAS	No
PØ6AUD	CABS Non-Add Item Generator for Staff Work Reports	UNCLAS	No
PØ7AUD	CABS Data Extraction for Staff Work Reports	UNCLAS	No
PØ8AUD	CABS Staff Work Reports	UNCLAS	No
PØ9AUD	Consolidation	UNCLAS	No
P1ØAUD	CABS AUTODIN	UNCLAS	No
P11AUD	Reformat Obligations for Monthly Cumulative Obligation Reporting	UNCLAS	No
P14AUD	STANFINS Extract	UNCLAS	No
P15AUD	Reformat Obligation Data for SOR Reports	UNCLAS	No
P2ØAUD	Status of Operating Resources Extract	UNCLAS	No
P21AUD	Status of Operating Resources	UNCLAS	No
P23AUD	Deviation Analysis Report	UNCLAS	No
P25AUD	Workload Analysis Report	UNCLAS	No
P27AUD	Average Salary Report	UNCLAS	No
U6CATU	Utility Spool	UNCLAS	No

Figure 2.3-01

FILE INVENTORY

	File ID	File Name	Media	File Size	Scty. Class.	Priv.	COOP Req.
	AH1ANC	CINFARS Phase III Transaction File	TAPE	1 REEL	UNCLAS	No	No
	AXWAVK	STANFINS APC Master	TAPE	1 REEL	UNCLAS	No	No
	AØAAUD	Control File	TAPE	1 REEL	UNCLAS	No	Yes
	AØ1AUD	Master Code File	TAPE	1 REEL	UNCLAS	No	Yes
	AØ2AUD	Budget Data Transaction	TAPE	1 REEL	UNCLAS	No	Yes
(OS)	AØ3AUD	Printape	TAPE	1 REEL	UNCLAS	No	Yes
	AØ7AUD	Staff Work Report Intermediate File	TAPE	1 REEL	UNCLAS	No	Yes
(OS)	AØ8AUD	Printape	TAPE	1 REEL	UNCLAS	No	Yes
	A11AUD	Card File	CARD	1ØØØ	UNCLAS	No	Yes
	A2ØAUD	Status of Operating Resources Extract	TAPE	1 REEL	UNCLAS	No	Yes
	BØAAUD	Control File Transaction	CARD	8ØØ	UNCLAS	No	Yes
	BØ1AUD	Master Code Transaction File	TAPE	1 REEL	UNCLAS	No	Yes
	BØ2AUD	Budget Data Station Level	TAPE	1 REEL	UNCLAS	No	Yes
	BØ9AUD	Budget Data Consolidation	TAPE	1 REEL	UNCLAS	No	Yes
	B1ØAUD	Budget Data AUTODIN Shipment	TAPE	1 REEL	UNCLAS	No	No
	B14AUD	STANFINS Data	TAPE	1 REEL	UNCLAS	No	No
	CM2ANC	CINFARS Prime Non-Error File	TAPE	1 REEL	UNCLAS	No	Yes
	CØ1AUD	Master Code Transaction	CARD	3ØØ	UNCLAS	No	Yes

Figure 2.4-01

FILE INVENTORY (CONTINUED)

File ID	File Name	Media	File Size	Scty. Class.	Priv.	COOP Req.
(OS) C21AUD	Printape	TAPE	1 REEL	UNCLAS	No	Yes
(OS) C23AUD	Printape	TAPE	1 REEL	UNCLAS	No	Yes
(OS) C25AUD	Printape	TAPE	1 REEL	UNCLAS	No	Yes
(OS) C27AUD	Printape	TAPE	1 REEL	UNCLAS	No	Yes
EXUAVK	STANFINS Subledger 3Ø	TAPE	1 REEL	UNCLAS	No	No
EØ2AUD	Budget Data Transactions	CARD	2,ØØØ	UNCLAS	No	No
(DOS) YØAAUD	Spool	TAPE	1 REEL	UNCLAS	No	No
(DOS) YØ1AUD	Spool	TAPE	1 REEL	UNCLAS	No	No
(DOS) YØ2AUD	Spool	TAPE	1 REEL	UNCLAS	No	No
(DOS) YØ3AUD	Spool	TAPE	1 REEL	UNCLAS	No	No
(DOS) YØ8AUD	Spool	TAPE	1 REEL	UNCLAS	No	No
(DOS) Y1ØAUD	Spool	TAPE	1 REEL	UNCLAS	No	No
(DOS) Y11AUD	Spool	TAPE	1 REEL	UNCLAS	No	No
(DOS) Y21AUD	Spool	TAPE	1 REEL	UNCLAS	No	No

Figure 2.4-01

CYCLE SUMMARY
For use of this form, see TB 18-111; the proponent agency is CSA.

1. DATE: 811201

2. CYCLE ID: AUDØA

3. CYCLE TITLE: CABS CONTROL FILE EDIT/UPDATE CYCLE

4. SUMMARY

PART I. CYCLE SUMMARY. This cycle edits and updates the Control File. It produces the controls which are used in subsequent CABS cycles. Initiate run via card reader, using Job Control Stream Deck AUDTØA. AUDTØA, CABS Control File Edit/Update, is the only run of this cycle.

Run ID	Run Title
AUDTØA	CABS Control File Edit/Update

PART II. SECURITY AND PRIVACY.

a. Security. No component of this cycle is classified.

b. Privacy. No component of this cycle is subject to privacy restrictions.

PART III. RESTRICTIONS. NA

PART IV. INTERFACE.

File ID	I/O	File Name	Source/Disposition
BØAAUD	I	Control File Transactions	Data Control

PART V. OTHER INFORMATION.

a. Reports.

Report PCN and RCS	Report Title
AUD-ØA1	Control File Edit Error Listing
AUD-ØA2	Control File Update Register
AUD-ØA3	Control File Listing
AUD-ØA4	Control File Transaction Card

b. Control Cards.

Control Card ID	Title
PØAAUD-CNTL	PØAAUD-CONTROL-CARD

c. General Information. NA

DA FORM 1 NOV 78 4742

Figure 2.5-01

CYCLE SUMMARY
For use of this form, see TB 18-111; the proponent agency is CSA.

1. DATE: 811201

2. CYCLE ID: AUDØ1

3. CYCLE TITLE: CABS MASTER CODE FILE EDIT/UPDATE CYCLE

4. SUMMARY

PART I. CYCLE SUMMARY. This cycle edits and updates the Master Code File. It produces an Edit/Update Register and a Master Code File Listing in Report Serial Number (RSN) sequence. This cycle also produces (depending on Control Card parameters) a Master Code File Listing in Five Year Defense Program (FYDP) sequence or a Master Code File Listing FYDP within category of data (i.e., dollars, manyears, end strength, workload) sequence. Initiate run via card reader, using Job Control Stream Deck AUDTØ1. AUDTØ1, CABS Master Code File Edit/Update, is the only run of this cycle.

Run ID	Run Title
AUDTØ1	CABS Master Code File Edit/Update

PART II. SECURITY AND PRIVACY.

a. Security. No component of this cycle is classified.

b. Privacy. No component of this cycle is subject to privacy restrictions.

PART III. RESTRICTIONS. NA

PART IV. INTERFACE.

File ID	I/O	File Name	Source/Disposition
CØ1AUD	I	Master Code Transactions	Data Control

PART V. OTHER INFORMATION.

a. Reports.

Report PCN and RCS	Report Title
AUD-Ø11	Master Code File Edit/Update Register
AUD-Ø12	Master Code File Listing in RSN Sequence
AUD-Ø13	Master Code File Listing in FYDP Sequence
AUD-Ø14	Master Code File Listing in FYDP within Category of Data Sequence
AUD-Ø15	Master Code File Cards

DA FORM 1 NOV 78 4742

Figure 2.5-02

CYCLE SUMMARY For use of this form, see TB 18-111; the proponent agency is CSA.	1. DATE 811201
2. CYCLE ID AUDØ1	3. CYCLE TITLE CABS MASTER CODE FILE EDIT/UPDATE CYCLE (CONTINUED)

4. SUMMARY

b. Control Cards.

Control Card ID	Title
PØ1AUD-CNTL	PØ1AUD-Control-Card

c. General Information. NA

DA FORM 1 NOV 78 4742

Figure 2.5-02

CYCLE SUMMARY For use of this form, see TB 18-111; the proponent agency is CSA.	1. DATE 811201
2. CYCLE ID AUDØ2	3. CYCLE TITLE CABS BUDGET DATA EDIT/UPDATE CYCLE

4. SUMMARY

PART I. CYCLE SUMMARY. This cycle edits and updates the CABS budget data. Initiate run via card reader, using Job Control Stream Deck AUDTØ2. AUDTØ2, CABS Budget Data Edit/Update, is the only run of this cycle.

Run ID	Run Title
AUDTØ2	CABS Budget Data Edit/Update

PART II. SECURITY AND PRIVACY.

a. Security. No component of this cycle is classified.

b. Privacy. No component of this cycle is subject to privacy restrictions.

PART III. RESTRICTIONS. NA

PART IV. INTERFACE.

File ID	I/O	File Name	Source/Disposition
EØ2AUD	I	Budget Data Transactions	Data Control

PART V. OTHER INFORMATION.

a. Reports.

Report PCN and RCS	Report Title
AUD-Ø21	Edit Error Listing
AUD-Ø22	Update Register

b. Control Cards.

Control Card ID	Title
PØ2AUD-CNTL	PØ2AUD-Control-Card

c. General Information. NA

DA FORM 1 NOV 78 4742

Figure 2.5-03

CYCLE SUMMARY
For use of this form, see TB 18-111; the proponent agency is CSA.

1. DATE: 811201

2. CYCLE ID: AUDØ3

3. CYCLE TITLE: CABS TRIAL TAB AND/OR BALANCE REPORT CYCLE

4. SUMMARY

PART I. CYCLE SUMMARY. This cycle produces either or both the Trial Tab Report and the Balance Report depending on Control Card Parameters. It accommodates station level or consolidated data depending on which input file is used. Initiate run via card reader, using Job Control Stream Deck AUDTØ3. AUDTØ3, CABS Trial Tab and/or Balance Report, is the only run of this cycle.

Run ID	Run Title
AUDTØ3	CABS Trial Tab and/or Balance Report

PART II. SECURITY AND PRIVACY.

a. Security. No component of this cycle is classified.

b. Privacy. No component of this cycle is subject to privacy restrictions.

PART III. RESTRICTIONS. NA

PART IV. INTERFACE. NA

PART V. OTHER INFORMATION.

a. Reports.

Report PCN and RCS	Report Title
AUD-Ø31	Trial Tabulation
AUD-Ø51	Balance Errors and Information

b. Control Cards.

Control Card ID	Title
PØ3AUD-CNTL	PØ3AUD-Control-Card
PØ4AUD-CNTL	PØ4AUD-Control-Card

c. General Information. NA

DA FORM 1 NOV 78 4742

Figure 2.5-04

CYCLE SUMMARY For use of this form, see TB 18-111; the proponent agency is CSA.	1. DATE 811201
2. CYCLE ID AUDØ4	3. CYCLE TITLE CABS STAFF WORKING REPORTS CYCLE

4. SUMMARY

PART I. CYCLE SUMMARY. This cycle produces the Staff Working Reports, utilizing station level or consolidated data. Special Staff Working Reports are produced when appropriate control card values are used. Initiate run via card reader, using Job Control Stream Deck AUDTØ4. AUDTØ4, CABS Staff Working Reports, is the only run of this cycle.

Run ID	Run Title
AUDTØ4	CABS Staff Working Reports

PART II. SECURITY AND PRIVACY.

a. Security. No component of this cycle is classified.

b. Privacy. No component of this cycle is subject to privacy restrictions.

PART III. RESTRICTIONS. NA

PART IV. INTERFACE. NA

PART V. OTHER INFORMATION.

a. Reports.

Report PCN and RCS	Report Title
AUD-Ø81	Staff Working Reports

b. Control Cards.

Control Card ID	Title
PØ6AUD-CNTL	PØ6AUD-Control-Card
PØ8AUD-CNTL	PØ8AUD-Control-Card

c. General Information. NA

DA FORM 1 NOV 78 4742

Figure 2.5-05

CYCLE SUMMARY For use of this form, see TB 18-111; the proponent agency is CSA.	1. DATE 812101
2. CYCLE ID AUDØ5	3. CYCLE TITLE CABS CONSOLIDATION CYCLE

4. SUMMARY

PART I. CYCLE SUMMARY. This cycle consolidates budget data into Command Summary Records for MACOM run or into station summary records (first two positions of station code) for installation run; for re-entry into the Edit/Update, Trial Tab and/or Balance, and the Staff Working Reports Cycles. Initiate run via card reader, using Job Control Stream Deck AUDTØ5. AUDTØ5, CABS Consolidation, is the only run of this cycle.

Run ID	Run Title
AUDTØ5	CABS Consolidation

PART II. SECURITY AND PRIVACY.

a. Security. No component of this cycle is classified.

b. Privacy. No component of this cycle is subject to privacy restrictions.

PART III. RESTRICTIONS. NA

PART IV. INTERFACE. NA

PART V. OTHER INFORMATION.

a. Reports. NA

b. Control Cards.

Control Card ID	Title
PØ9AUD-CNTL	PØ9AUD-Control-Card

c. General Information. NA

DA FORM 1 NOV 78 4742

Figure 2.5-06

CYCLE SUMMARY For use of this form, see TB 18-111; the proponent agency is CSA.	1. DATE 811201
2. CYCLE ID AUDØ6	3. CYCLE TITLE CABS AUTODIN CYCLE

4. SUMMARY

PART I. CYCLE SUMMARY. This cycle selects budget data at the MACOM to be sent to the installation when run at the MACOM level. It selects data at the installation to be sent to the MACOM when run at the installation level. Initiate run via card reader, using Job Control Stream Deck AUDTØ6. AUDTØ6, CABS AUTODIN is the only run of this cycle.

Run ID	Run Title
AUDTØ6	CABS AUTODIN

PART II. SECURITY AND PRIVACY.

a. Security. No component of this cycle is classified.

b. Privacy. No component of this cycle is subject to privacy restrictions.

PART III. RESTRICTIONS. NA

PART IV. INTERFACE. NA

PART V. OTHER INFORMATION.

a. Reports. NA

b. Control Cards.

Control Card ID	Title
P1ØAUD-CNTLØ1	P1ØAUD-CONTROL-CARD
P1ØAUD-CNTLØ3	P1ØAUD-STATION-SELECT-CARD
P1ØAUD-CNTLØ4	P1ØAUD-ROUTING-INDICATOR-CARD
P1ØAUD-CNTLØ5	P1ØAUD-RSN-SELECT-CARD
P1ØAUD-CNTLØ6	P1ØAUD-ITEM-SELECT-CARD

c. General Information. NA

DA FORM 1 NOV 78 4742

Figure 2.5-07

CYCLE SUMMARY
For use of this form, see TB 18-111; the proponent agency is CSA.

1. DATE: 811201

2. CYCLE ID: AUDØ7

3. CYCLE TITLE: REFORMAT OBLIGATIONS FOR MONTHLY CUMULATIVE OBLIGATION REPORTING

4. SUMMARY

PART I. CYCLE SUMMARY. This cycle selects cumulative obligation data and reformats it into CABS budget data format for subsequent entry and processing through a CABS Budget Cycle. For installation level runs, the STANFINS data tape (File B14AUD from cycle AUD14) and/or card input (PRIME deck) will be used. For MACOM runs, data tapes from the Command Integrated Financial Accounting and Reporting System (CINFARS) will be input. Initiate run via card reader, using Job Control Stream Deck AUDMØ7. AUDMØ7, Reformat Cumulative Obligation Data, is the only run of this cycle.

Run ID	Run Title
AUDMØ7	Reformat Obligations for Monthly Cumulative Obligation Reporting

PART II. SECURITY AND PRIVACY.

a. Security. No component of this cycle is classified.

b. Privacy. No component of this cycle is subject to privacy restrictions.

PART III. RESTRICTIONS. NA

PART IV. INTERFACE.

File ID	I/O	File Name	Source/Disposition
AH1ANC	I	Phase III Transaction File	Data Control
A11AUD	I	Card Input	Data Control
CM2ANC	I	Prime Non-Error File	Data Control

PART V. OTHER INFORMATION.

a. Reports.

Report PCN and RCS	Report Title
AUD-111	Record Counts and Messages
AUD-112	Cost Factor Report

b. Control Cards.

Control Card ID	Title
P11AUD-CNTL	P11AUD-Control-Card

c. General Information. NA

DA FORM 1 NOV 78 4742

Figure 2.5-08

CYCLE SUMMARY For use of this form, see TB 18-111; the proponent agency is CSA.	1. DATE 811201
LE ID D14	3. CYCLE TITLE STANFINS EXTRACT

IMARY

I. CYCLE SUMMARY. This cycle selects actual obligation data from the dard Finance System (STANFINS) and reformats it into CABS SOR data format subsequent entry to Cycle AUD15 to reformat the actual CSCFA-218 data or ycle AUDØ7 to reformat cumulative obligation data. Initiate run via card er, using Job Control Stream Deck AUDM14. AUDM14, Extract STANFINS SOR , is the only run of this cycle.

Run ID	Run Title
AUDM14	STANFINS Extract

II. SECURITY AND PRIVACY.

a. Security. No component of this cycle is classified.

b. Privacy. No component of this cycle is subject to privacy restric- ıs.

III. RESTRICTIONS. NA

IV. INTERFACE.

File ID	I/O	File Name	Source/Disposition
AXWAVK	I	Accounting Processing Code (APC) Master (STANFINS)	Data Control
EXUAVK	I	Subledger 3Ø Detail (STANFINS)	Data Control

V. OTHER INFORMATION.

a. Reports. NA

b. Control Cards.

Control Card ID	Title
P14AUD-CNTL	P14AUD-CONTROL-CARD

c. General Information. NA

FORM 1 NOV 78 **4742**

Figure 2.5-09

CYCLE SUMMARY For use of this form, see TB 18-111; the proponent agency is CSA.	1. DATE 811201
CYCLE ID JD15	3. CYCLE TITLE REFORMAT OBLIGATION DATA FOR SOR REPORTS

SUMMARY

ART I. CYCLE SUMMARY. This cycle selects actual data from the Command ntegrated Financial Accounting and Reporting System (CINFARS) and reformats : into CABS budget data format for subsequent entry and processing through a ABS Budget Cycle. For MACOM runs, CINFARS tape is input. For installation evel runs, input will be STANFINS Extract data (B14AUD) and/or card input 'RIME deck). Initiate run via card reader, using Job Control Stream Deck JDM15. AUDM15, Reformat Actual CSCFA-218 Data for CABS Reporting, is the ily run of this cycle.

Run ID	Run Title
AUDM15	Reformat Obligation Data for SOR Reports

ART II. SECURITY AND PRIVACY.

a. Security. No component of this cycle is classified.

b. Privacy. No component of this cycle is subject to privacy estrictions.

ART III. RESTRICTIONS. NA

ART IV. INTERFACE.

File ID	I/O	File Name	Source/Disposition
A15AUD	I	Card Input	Data Control
CM2ANC	I	PRIME Non-Error File	Data Control

ART V. OTHER INFORMATION.

a. Reports. NA

b. Control Cards.

Control Card ID	Title
P15AUD-CNTL	P15AUD-Control Card

c. General Information. NA.

A FORM 1 NOV 78 4742

Figure 2.5-10

CYCLE SUMMARY
For use of this form, see TB 18-111; the proponent agency is CSA.

1. DATE: 811201

2. CYCLE ID: AUD2Ø

3. CYCLE TITLE: CABS STATUS OF OPERATING RESOURCES

4. SUMMARY

PART I. CYCLE SUMMARY. This cycle produces the Status of Operating Resources Report. Initiate run via card reader, using Job Control Stream Deck AUDM2Ø. AUDM2Ø Status of Operating Resources is the only Run of this cycle.

Run ID	Run Title
AUDM2Ø	Status of Operating Resources

PART II. SECURITY AND PRIVACY.

a. Security. No component of this cycle is classified.

b. Privacy. No component of this cycle is subject to privacy restrictions.

PART III. RESTRICTIONS. NA

PART IV. INTERFACE. NA

PART V. OTHER INFORMATION.

a. Reports.

Report PCN and RCS	Report Title
AUD-211	Status of Operating Resources
AUD-231	Deviation Analysis Report
AUD-251	Workload Analysis Report
AUD-271	Average Salary Report

b. Control Cards.

Control Card ID	Title
P2ØAUD-CNTL	P2ØAUD-CONTROL-CARD

c. General Information. NA

DA FORM 1 NOV 78 4742

Figure 2.5-11

SECTION 3. DESCRIPTION OF RUNS

3.1 Run Inventory. The CABS system has eleven cycles each with one run. See Figure 3.1-01.

3.2 Phasing. There are no phasing requirements in the CABS system.

RUN INVENTORY

AUDTØA Run Description. This run edits and updates the Control File. It produces the controls which are used in subsequent CABS cycles.

AUDTØ1 Run Description. This run edits and updates the Master Code File. It produces an Edit/Update Register and a Master Code File Listing in Report Serial Number (RSN) sequence. This run also produces (depending on Control Card parameters) a Master Code File Listing in Five Year Defense Program (FYDP) sequence or a Master Code File Listing FYDP within category of data (i.e., dollars, manyears, end strength, workload) sequence.

AUDTØ2 Run Description. This run edits and updates the CABS budget data.

AUDTØ3 Run Description. This run produces either or both the Trial Tab Report and the Balance Report depending on Control Card Parameters. It accommodates station level or consolidated data depending on which input file is used.

AUDTØ4 Run Description. This run produces the Staff Working Reports, utilizing station level or consolidated data. Special Staff Working Reports are produced when appropriate control card values are used.

AUDTØ5 Run Description. This run consolidates budget data into Command Summary Records for MACOM run or into station summary records (first two positions of station code) for installation run; for re-entry into the Edit/Update, Trial Tab and/or Balance, and the Staff Working Reports Cycles.

AUDTØ6 Run Description. This run selects budget data at the MACOM to be sent to the installation when run at the MACOM level. It selects data at the installation to be sent to the MACOM when run at the installation level.

AUDMØ7 Run Description. This run selects cumulative obligation data from the Command Integrated Financial Accounting and Reporting System (CINFARS) and reformats it into CABS budget data format for subsequent entry and processing through a CABS Budget Cycle. (PRIME card deck and/or STANFINS data from AUDM14 maybe input in lieu of CINFARS tape.)

AUDM14 Run Description. This run extracts data from the STANFINS Subledger 3Ø File and produces an output tape file in CINFARS PRIME format which can then be used as input to run AUDM15 or AUDMØ7.

Figure 3.1-01

RUN INVENTORY (Continued)

AUDM15 Run Description. This run selects actual data from the Command Integrated Financial Accounting and Reporting System (CINFARS) and reformats it into CABS budget data format for subsequent entry and processing through a CABS Budget Cycle. (For installation level runs, PRIME card deck or STANFINS data from AUDM14 may be input in lieu of CINFARS tape.)

AUDM2Ø Run Description. This run produces the Status of Operating Resources Report, the Deviation Analysis Report, the Workload Analysis Report, and the Average Salary Report.

Figure 3.1-01

RUN INVENTORY (Continued)

Run	Program
AUDØA/AUDTØA	PØAAUD
AUDØ1/AUDTØ1	PØ1AUD
AUDØ2/AUDTØ2	IEBGENER
	PØ2AUD
AUDØ3/AUDTØ3	IEBGENER
	PØ3AUD
	PØ4AUD
	PØ5AUD
	U6CATU
AUDØ4/AUDTØ4	IEBGENER
	PØ6AUD
	PØ7AUD
	PØ8AUD
	U6CATU
AUDØ5/AUDTØ5	PØ9AUD
AUDØ6/AUDTØ6	P1ØAUD
AUDØ7/AUDMØ7	P11AUD
AUD14/AUDM14	P14AUD
AUD15/AUDM15	P15AUD
AUD2Ø/AUDM2Ø	P2ØAUD
	P21AUD
	P23AUD
	P25AUD
	P27AUD

Figure 3.1-01

3.3 Run Description AUDTØA. Reference Figure 3.3-01

INDEX FOR FIGURE 3.3-01

	NAME	PAGE NO.
3.3.1	Control Inputs	
3.3.1.1	Control Cards	3-6
3.3.1.2	Control Input Statements	NA
3.3.1.2.1	Job Control Statements (PROC)	3-7 thru 3-11
3.3.1.2.2	Job Control Statements (RETRIEVAL)	3-12
3.3.2	Management Information	
3.3.2.1	Run Setup-Console Operating Information	3-13
3.3.2.2	Run Messages and Responses	3-14
3.3.2.3	Logic Chart	3-15
3.3.3	Input-Output Files	See DA Form 4744 for the I/O File Information
3.3.4	Output Reports	3-16
3.3.5	Reproduced Output Reports	
3.3.5.1	Reproduced Output Reports	NA
3.3.5.2	PCM Processing Instructions	NA
3.3.6	Restart/Recovery Procedures	
3.3.6.1	Recovery Instructions	3-17

CONTROL CARD PREPARATION For use of this form, see TB 18-111; the proponent agency is CSA.	1. DATE 811201
2. RUN ID AUDTØA	3. RUN TITLE CABS CONTROL FILE EDIT/UPDATE
4. CONTROL CARD ID PØAAUD-CNTL	5. CONTROL CARD TITLE PØAAUD-CONTROL-CARD
6. CONTROL CARD PURPOSE AND REMARKS To provide program parameter options.	
7. USER INFORMATION, IF REQUIRED	

8. CONTROL CARD INSTRUCTIONS

FIELD a.	POSITION b.	PREPARATION INSTRUCTIONS c.	RESPONSIBLE AGENCY d.
CNTL-ID	1 11	Constant "PØAAUD-CNTL"	
	12	Blank	
TYPE-RUN	13 19	"INITIAL" to create new control file. "UPDATE" to update existing file.	Functional user
	2Ø	Blank	
	21 28	Literal "CARDOUT="	
CARD-RQMT	29	"N" if no card output desired. "Y" to produce cards for records on new control file.	Functional user
	3Ø 8Ø	Blank	
NOTE:	Only columns 1-11, 13, and 29 are critical; remainder is for visual reference.		

DA FORM 1 NOV 78 4743

Figure 3.3-01

JOB CONTROL STATEMENTS (PROC) - OS

```
//AUDTØAS1 PROC CYC=COB
//*
//*  ********************************************************************
//*  *   THIS PROC PERFORMS CABS CONTROL FILE EDIT/UPDATE               *
//*  ********************************************************************
//*
//PØAAUDØ1 EXEC PGM=PØAAUD
//IAØAAUD  DD DSN=AUD.CABS.&CYC..AØAAUD(Ø),DISP=OLD,UNIT=(TAPE9,,DEFER)
//IAØ1AUD  DD DSN=AUD.CABS.&CYC..AØ1AUD(Ø),DISP=OLD,UNIT=TAPE9
//OAØAAUD  DD DSN=AUD.CABS.&CYC..AØAAUD(+1),DISP=(NEW,CATLG,DELETE),
//         UNIT=TAPE9,LABEL=RETPD=365,
//         DCB=(RECFM=BFS,BLKSIZE=12ØØ,LRECL=12Ø)
//OCØAAUD  DD SYSOUT=A,DCB=BLKSIZE=133
//OEØAAUD  DD SYSOUT=B,DCB=BLKSIZE=8Ø
//WFØAAUD  DD UNIT=SYSDA,SPACE=(CYL,5),
//         DCB=(RECFM=BFS,BLKSIZE=12ØØ,LRECL=12Ø)
//WGØAAUD  DD UNIT=SYSDA,SPACE=(CYL,5),
//         DCB=(RECFM=BFS,BLKSIZE=12ØØ,LRECL=12Ø)
//WHØAAUD  DD UNIT=SYSDA,SPACE=(CYL,5),
//         DCB=(RECFM=BFS,BLKSIZE=12ØØ,LRECL=12Ø)
//SORTLIB  DD DSN=SYS1.SORTLIB,DISP=SHR
//SORTWKØ1 DD UNIT=SYSDA,SPACE=(CYL,5,,CONTIG)
//SORTWKØ2 DD UNIT=SYSDA,SPACE=(CYL,5,,CONTIG)
//SORTWKØ3 DD UNIT=SYSDA,SPACE=(CYL,5,,CONTIG)
//SYSOUT   DD SYSOUT=A
//SYSUDUMP  DD SYSOUT=A
//IBØAAUD  DD DUMMY,DCB=BLKSIZE=8Ø
```

Figure 3.3-01

JOB CONTROL STATEMENT CARD DECK LISTING - DOS

```
// JOB AUDTØA    C1DØR     CABS CTL FILE              CYC=AOC
*  JOB STEP PØAAUDØ1
// ASSGN SYSØØ1,X'DK2'           SORTWK
// ASSGN SYSØ14,X'CRØ'           CARD INPUT INCL CNTL & TRANS
// TLBL IAØ1AUD,'AOC.AØ1AUD'        MASTER CODE FILE AOC
// TLBL IAØAAUD,'AOC.AØAAUD'        INPUT CONTROL FILE AOC
// TLBL OAØAAUD,'AOC.AØAAUD',,,,,,Ø3 OUTPUT CONTROL FILE AOC
// DLBL OCØAAUD,'CØAAUD,D',Ø,SD       PRINTFILE
// EXTENT SYSØ21,WRK1&P,1,Ø,2Ø,1,B=1
// DLBL OEØAAUD,'EØAAUD,D',Ø,SD       PUNCHFILE
// EXTENT SYSØ21,WRK1&P,1,Ø,2Ø,1,B=1
// DLBL WFØAAUD,'FØAAUD,D',Ø,SD
// EXTENT SYSØ21,WRK1&P,1,Ø,2Ø,1,B=1
// DLBL WGØAAUD,'GØAAUD,D',Ø,SD
// EXTENT SYSØ21,WRK1&P,1,Ø,2Ø,1ØØ,B=1
// DLBL WHØAAUD,'HØAAUD',Ø,SD
// EXTENT SYSØ21,WRK1&P,1,Ø,2Ø,1ØØ,B=1
// DLBL SORTWK1,'JØAAUD',Ø,SD
// EXTENT SYSØØ1,WRK2&P,1,Ø,2Ø,1ØØ,B=1
// TLBL OYØAAUD,'YØAAUD'         SPOOL OUTPUT
// EXEC TDYNASN
OPEN OYØAAUD,SYSØ13,OUTPUT
/*
// EXEC PØAAUD
PØAAUD-CNTL (User Control Card Options)
/*        INSERT ANY CARD TRANSACTIONS BEFORE THIS CARD
// EXEC TDYNASN
CLOSE OYØAAUD,SYSØ13,OUTPUT
/*
CLOSE SYSØ13
/*
// DLBL WHØAAUD,'HØAAUD'
// EXTENT SYSØ21,WRK1&P,1,Ø,2Ø,1ØØ,B=1
// DLBL OCØAAUD,'CØAAUD',Ø,SD          PRINTFILE
// EXTENT SYSØ21,WRK1&P,1,Ø,2Ø,1,B=1
// DLBL OEØAAUD,'EØAAUD',Ø,SD          PUNCHFILE
// EXTENT SYSØ21,WRK1&P,1,Ø,2Ø,1,B=1
// EXEC ADASD
/&
```

Figure 3.3-01

JOB CONTROL STATEMENT CARD DECK LISTING - DOS (CONTINUED)

```
// JOB AUDTØA    C1DØR     CABS CTL FILE              CYC=COB
*  JOB STEP PØAAUDØ1
// ASSGN SYSØØ1,X'DK2'            SORTWK
// ASSGN SYSØ14,X'CRØ'            CARD INPUT INCL CNTL & TRANS
// TLBL IAØ1AUD,'COB.AØ1AUD'          MASTER CODE FILE COB
// TLBL IAØAAUD,'COB.AØAAUD'          INPUT CONTROL FILE COB
// TLBL OAØAAUD,'COB.AØAAUD',,,,,,Ø3 OUTPUT CONTROL FILE COB
// DLBL OCØAAUD,'CØAAUD,D',Ø,SD        PRINTFILE
// EXTENT SYSØ21,WRK1&P,1,Ø,2Ø,1,B=1
// DLBL OEØAAUD,'EØAAUD,D',Ø,SD        PUNCHFILE
// EXTENT SYSØ21,WRK1&P,1,Ø,2Ø,1,B=1
// DLBL WFØAAUD,'FØAAUD,D',Ø,SD
// EXTENT SYSØ21,WRK1&P,1,Ø,2Ø,1,B=1
// DLBL WGØAAUD,'GØAAUD,D',Ø,SD
// EXTENT SYSØ21,WRK1&P,1,Ø,2Ø,1ØØ,B=1
// DLBL WHØAAUD,'HØAAUD',Ø,SD
// EXTENT SYSØ21,WRK1&P,1,Ø,2Ø,1ØØ,B=1
// DLBL SORTWK1,'JØAAUD',Ø,SD
// EXTENT SYSØØ1,WRK2&P,1,Ø,2Ø,1ØØ,B=1
// TLBL OYØAAUD,'YØAAUD'          SPOOL OUTPUT
// EXEC TDYNASN
OPEN OYØAAUD,SYSØ13,OUTPUT
/*
// EXEC PØAAUD
PØAAUD-CNTL (User Control Card Options)
/*        INSERT ANY CARD TRANSACTIONS BEFORE THIS CARD
// EXEC TDYNASN
CLOSE OYØAAUD,SYSØ13,OUTPUT
/*
CLOSE SYSØ13
/*
// DLBL WHØAAUD,'HØAAUD'
// EXTENT SYSØ21,WRK1&P,1,Ø,2Ø,1ØØ,B=1
// DLBL OCØAAUD,'CØAAUD',Ø,SD          PRINTFILE
// EXTENT SYSØ21,WRK1&P,1,Ø,2Ø,1,B=1
// DLBL OEØAAUD,'EØAAUD',Ø,SD          PUNCHFILE
// EXTENT SYSØ21,WRK1&P,1,Ø,2Ø,1,B=1
// EXEC ADASD
/&
```

Figure 3.3-01

JOB CONTROL STATEMENT CARD DECK LISTING - DOS (CONTINUED)

```
// JOB AUDTØA    C1DØR     CABS CTL FILE              CYC=OBL
*  JOB STEP PØAAUDØ1
// ASSGN SYSØØ1,X'DK2'           SORTWK
// ASSGN SYSØ14,X'CRØ'           CARD INPUT INCL CNTL & TRANS
// TLBL IAØ1AUD,'OBL.AØ1AUD'         MASTER CODE FILE OBL
// TLBL IAØAAUD,'OBL.AØAAUD'         INPUT CONTROL FILE OBL
// TLBL OAØAAUD,'OBL.AØAAUD',,,,,,Ø3 OUTPUT CONTROL FILE OBL
// DLBL OCØAAUD,'CØAAUD,D',Ø,SD        PRINTFILE
// EXTENT SYSØ21,WRK1&P,1,Ø,2Ø,1,B=1
// DLBL OEØAAUD,'EØAAUD,D',Ø,SD        PUNCHFILE
// EXTENT SYSØ21,WRK1&P,1,Ø,2Ø,1,B=1
// DLBL WFØAAUD,'FØAAUD,D',Ø,SD
// EXTENT SYSØ21,WRK1&P,1,Ø,2Ø,1,B=1
// DLBL WGØAAUD,'GØAAUD,D',Ø,SD
// EXTENT SYSØ21,WRK1&P,1,Ø,2Ø,1ØØ,B=1
// DLBL WHØAAUD,'HØAAUD',Ø,SD
// EXTENT SYSØ21,WRK1&P,1,Ø,2Ø,1ØØ,B=1
// DLBL SORTWK1,'JØAAUD',Ø,SD
// EXTENT SYSØØ1,WRK2&P,1,Ø,2Ø,1ØØ,B=1
// TLBL OYØAAUD,'YØAAUD'         SPOOL OUTPUT
// EXEC TDYNASN
OPEN OYØAAUD,SYSØ13,OUTPUT
/*
// EXEC PØAAUD
PØAAUD-CNTL (User Control Card Options)
/*        INSERT ANY CARD TRANSACTIONS BEFORE THIS CARD
// EXEC TDYNASN
CLOSE OYØAAUD,SYSØ13,OUTPUT
/*
CLOSE SYSØ13
/*
// DLBL WHØAAUD,'HØAAUD'
// EXTENT SYSØ21,WRK1&P,1,Ø,2Ø,1ØØ,B=1
// DLBL OCØAAUD,'CØAAUD',Ø,SD          PRINTFILE
// EXTENT SYSØ21,WRK1&P,1,Ø,2Ø,1,B=1
// DLBL OEØAAUD,'EØAAUD',Ø,SD          PUNCHFILE
// EXTENT SYSØ21,WRK1&P,1,Ø,2Ø,1,B=1
// EXEC ADASD
/&
```

Figure 3.3-01

JOB CONTROL STATEMENT CARD DECK LISTING - DOS (CONTINUED)

```
// JOB AUDTØA    C1DØR     CABS CTL FILE              CYC=SOR
*  JOB STEP PØAAUDØ1
// ASSGN SYSØØ1,X'DK2'           SORTWK
// ASSGN SYSØ14,X'CRØ'           CARD INPUT INCL CNTL & TRANS
// TLBL IAØ1AUD,'SOR.AØ1AUD'         MASTER CODE FILE SOR
// TLBL IAØAAUD,'SOR.AØAAUD'         INPUT CONTROL FILE SOR
// TLBL OAØAAUD,'SOR.AØAAUD',,,,,,Ø3 OUTPUT CONTROL FILE SOR
// DLBL OCØAAUD,'CØAAUD,D',Ø,SD        PRINTFILE
// EXTENT SYSØ21,WRK1&P,1,Ø,2Ø,1,B=1
// DLBL OEØAAUD,'EØAAUD,D',Ø,SD        PUNCHFILE
// EXTENT SYSØ21,WRK1&P,1,Ø,2Ø,1,B=1
// DLBL WFØAAUD,'FØAAUD,D',Ø,SD
// EXTENT SYSØ21,WRK1&P,1,Ø,2Ø,1,B=1
// DLBL WGØAAUD,'GØAAUD,D',Ø,SD
// EXTENT SYSØ21,WRK1&P,1,Ø,2Ø,1ØØ,B=1
// DLBL WHØAAUD,'HØAAUD',Ø,SD
// EXTENT SYSØ21,WRK1&P,1,Ø,2Ø,1ØØ,B=1
// DLBL SORTWK1,'JØAAUD',Ø,SD
// EXTENT SYSØØ1,WRK2&P,1,Ø,2Ø,1ØØ,B=1
// TLBL OYØAAUD,'YØAAUD'         SPOOL OUTPUT
// EXEC TDYNASN
OPEN OYØAAUD,SYSØ13,OUTPUT
/*
// EXEC PØAAUD
PØAAUD-CNTL (User Control Card Options)
/*        INSERT ANY CARD TRANSACTIONS BEFORE THIS CARD
// EXEC TDYNASN
CLOSE OYØAAUD,SYSØ13,OUTPUT
/*
CLOSE SYSØ13
/*
// DLBL WHØAAUD,'HØAAUD'
// EXTENT SYSØ21,WRK1&P,1,Ø,2Ø,1ØØ,B=1
// DLBL OCØAAUD,'CØAAUD',Ø,SD          PRINTFILE
// EXTENT SYSØ21,WRK1&P,1,Ø,2Ø,1,B=1
// DLBL OEØAAUD,'EØAAUD',Ø,SD          PUNCHFILE
// EXTENT SYSØ21,WRK1&P,1,Ø,2Ø,1,B=1
// EXEC ADASD
/&
```

Figure 3.3-01

JOB CONTROL STATEMENT (RETRIEVAL) - OS

```
:  AUDTØA
E:  CABS CONTROL FILE EDIT/UPDATE

A    JOB (Accounting Information)
AØ1 EXEC AUDTØAS1,CYC=XXX
DØ1.IBØAAUD DD *
CNTL          (User Control Card Options)

           INSERT CONTROL FILE TRANSACTION CARDS BEFORE THIS CARD
```

On EXEC CARD, substitute for XXX the appropriate value to indicate type of run:

COB=	Command Operating Budget
AOC	
OBL	
SOR	

Figure 3.3-01

RUN SETUP—CONSOLE OPERATING INFORMATION
For use of this form, see TB 18-111; the proponent agency is CSA.

1. DATE: 811201

2. RUN ID	3. RUN TITLE	4. SECLAS/PRIV
AUDTØA	CABS CONTROL FILE EDIT/UPDATE	U/N

5. PERIPHERAL EQUIPMENT

TAPE DRIVES	2
DISK DRIVES	1
CARD READER	1
CARD PUNCH	1 1/
PRINTER	1
OTHER	Ø

6. CORE REQ	7. POINT OF CONTACT	8. RUN AS OF	9. RUN DATE
76K			

10. CONT CD ID	11. DATE/TIME SCH IN	12. DATE/TIME SCH OUT
PØAAUD-CNTL		

13. SYSTEM	14. RUN NO.	15. EST TIME	16. LANGUAGE
OS/DOS		7 MIN.	COBOL

17. ID CODE	18. FILE ID	19. VOLUME NO.	20. I/O	21. MEDIA	22. UNIT	23. RETN	24. SECLAS/ PRIV	25. SOURCE	26. DISPOSITION	27. OPERATOR NOTES
PØAAUDØ1	AØAAUD2/		I	TAPE			U/N	LIBRARY	LIBRARY	
	AØAAUD		O	TAPE		D365	U/N	SCRATCH	LIBRARY	
	AØ1AUD		I	TAPE			U/N	LIBRARY	LIBRARY	
	BØAAUD		I	CARD	SYSCR/ SYSIPT		U/N	DATA CONTROL	DATA CONTROL	
(OS)	CØAAUD		O	DISK			U/N	SCRATCH	SPOOL	
			O	LIST	SYSPR		U/N	DISK	DATA CONTROL	
(OS)	EØAAUD		O	DISK			U/N	SCRATCH	SPOOL	
			O	CARD	SYSCP		U/N	DISK	DATA CONTROL	
(DOS)	YØAAUD		O	TAPE			U/N	SCRATCH	SPOOL	

28. REMARKS

1/ The card punch is optional depending on the Control Card value assigned.
2/ OPTIONAL

DA FORM 1 NOV 78 4744

☆U.S. Government Printing Office: 1980—310-981/8838

Figure 3.3-01

RUN MESSAGES AND RESPONSES For use of this form, see TB 18-111; the proponent agency is CSA.	1. DATE 811201
2. RUN ID AUDTØA	3. RUN TITLE CABS CONTROL FILE EDIT/UPDATE

4. MESSAGE DISPLAYED	5. ACTION REQUIRED
CONSOLE MESSAGES:	
SAME AS SYSOUT/SYSLST	
SYSOUT/SYSLST MESSAGES:	
PØAAUD 11 H * JOB TERMINATED	
* CTL CARD ERROR	First card input must be a valid PØAAUD-CNTL card. Correct or insert control card and restart the run.
* MCF EXCEEDS TABLE	Master Code File contains more than 5ØØ unique "RSN and command code". Problem must be resolved by functional user and/or functional proponent.
*INVALID SORT	Restart the run. If problem recurs, notify system analyst.

6. REMARKS

DA FORM 1 NOV 78 4745

Figure 3.3-01

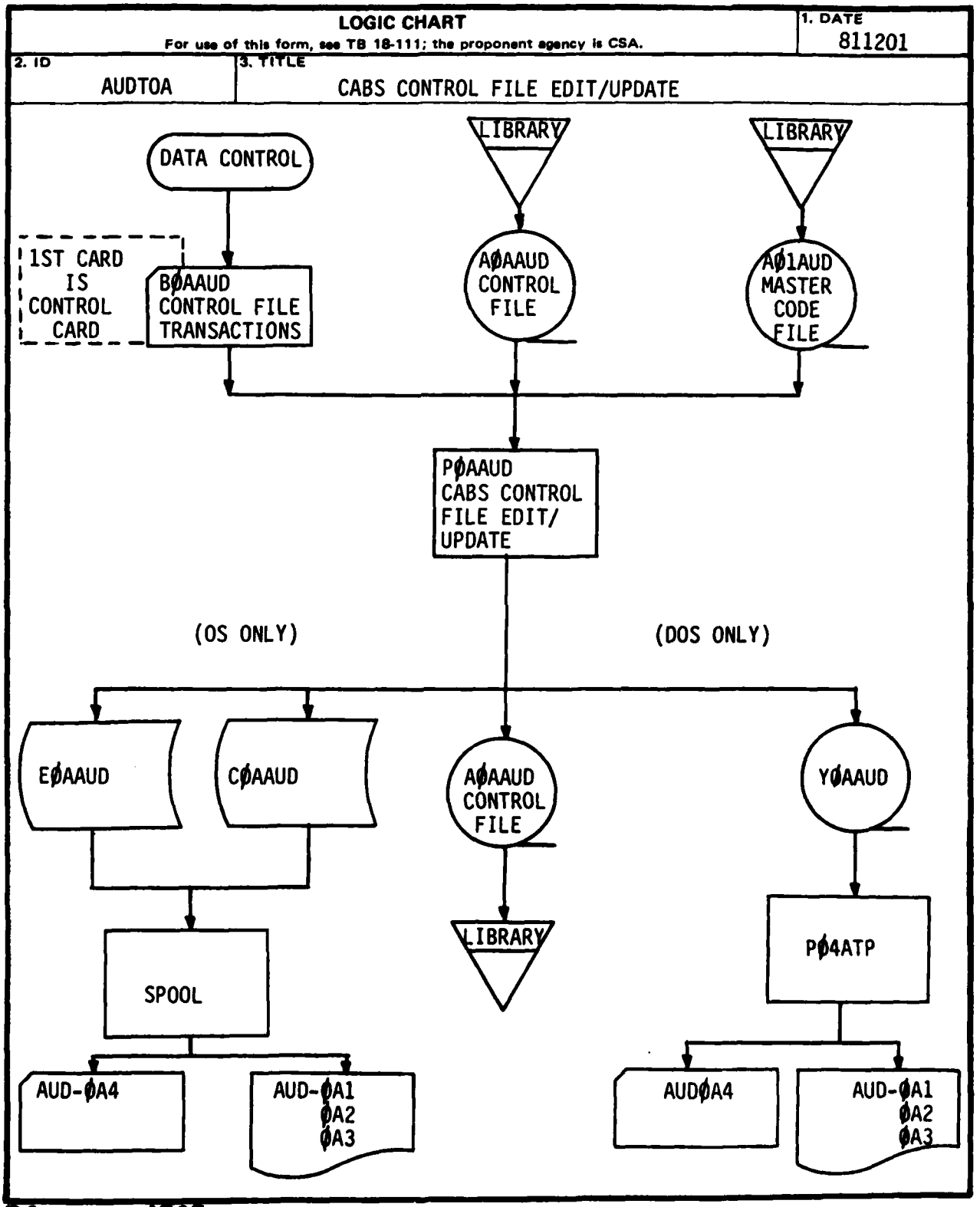

DA FORM 1 NOV 78 4735

Figure 3.3-01

OUTPUT REPORTS

For use of this form, see TB 18-111; the proponent agency is CSA.

1. RUN ID	2. DATE
AUDTØA	811201

3. FILE ID	4. MEDIA	5. PCN/RCS	6. SECLAS/ PRIV	7. PRINTER					8. VOLUME	9. REPORT TITLE	10. DISPOSITION
				PAPER a.	NO. OF CYS b.	TAPE c.	PRINT POS d.	LINE UP e.			
CØAAUD	DISK	AUD-ØA1	U/N							CABS CONTROL FILE EDIT ERROR LISTING	PGM/BDGT DIVISION
CØAAUD	DISK	AUD-ØA2	U/N							CABS CONTROL FILE UPDATE REGISTER	PGM/BDGT DIVISION
CØAAUD	DISK	AUD-ØA3	U/N							CABS CONTROL FILE LISTING	PGM/BDGT DIVISION
EØAAUD	DISK	AUD-ØA4	U/N							CONTROL FILE CARD DECK	PGM/BDGT DIVISION
BØAAUD	CARD		U/N							CONTROL FILE TRANSACTION CARD	PGM/BDGT DIVISION

11. REMARKS

DA FORM 1 NOV 78 4748

Figure 3.3-01

RECOVERY INSTRUCTIONS For use of this form, see TB 18-111; the proponent agency is CSA.	1. DATE 811201
2. RUN ID AUDTØA	3. RUN TITLE CABS CONTROL FILE EDIT/UPDATE
4. ID CODE	5. RECOVERY INSTRUCTIONS
PØAAUDØ1	Restart the run.
6. REMARKS	

DA FORM 1 NOV 78 4751

Figure 3.3-01

(Blank Page)

3.4 Run Description AUDTØ1. Reference Figure 3.4-01

INDEX FOR FIGURE 3.4-01

	NAME	PAGE NO.
3.4.1	Control Inputs	
3.4.1.1	Control Cards	3-20 thru 3-21
3.4.1.2	Control Input Statements	NA
3.4.1.2.1	Job Control Statements (PROC)	3-22 thru 3-26
3.4.1.2.2	Job Control Statements (RETRIEVAL)	3-27
3.4.2	Management Information	
3.4.2.1	Run Setup-Console Operating Information	3-28
3.4.2.2	Run Messages and Responses	3-29
3.4.2.3	Logic Chart	3-30
3.4.3	Input-Output Files	See DA Form 4744 for the I/O File Information
3.4.4	Output Reports	
3.4.5	Reproduced Output Reports	
3.4.5.1	Reproduced Output Reports	3-31
3.4.5.2	PCM Processing Instructions	NA
3.4.6	Restart/Recovery Procedures	
3.4.6.1	Recovery Instructions	3-32

CONTROL CARD PREPARATION For use of this form, see TB 18-111; the proponent agency is CSA.	1. DATE 811201
2. RUN ID AUDTØ1	3. RUN TITLE CABS MASTER CODE FILE EDIT/UPDATE
4. CONTROL CARD ID PØ1AUD-CNTL	5. CONTROL CARD TITLE PØ1AUD-CONTROL-CARD
6. CONTROL CARD PURPOSE AND REMARKS To provide program parameter options.	
7. USER INFORMATION, IF REQUIRED	

8. CONTROL CARD INSTRUCTIONS

FIELD a.	POSITION b.	PREPARATION INSTRUCTIONS c.	RESPONSIBLE AGENCY d.
CNTL-ID	1 11	Constant "PØ1AUD-CNTL"	
	12	Blank	
TYPE-RUN	13 19	"INITIAL" to create new MCF. "UPDATE " to update an existing MCF. "FYDP " to produce MCF listing in FYDP sequence. "CAT " to produce MCF listing in sequence by FYDP within category.	Functional user
	2Ø	Blank	
CMD-1	21 23	1st command code; must be numeric.	Functional user
	24	Blank	
CMD-2	25 27	2d command code; numeric or blank.	Functional user
	28	Blank	
CMD-3	29 31	3d command code; numeric or blank	Functional user
	32	Blank	

DA FORM 1 NOV 78 4743

Figure 3.4-01

CONTROL CARD PREPARATION *(CONTINUATION)* For use of this form, see TB 18-111; the proponent agency is CSA.			1. DATE 811201
2. RUN ID AUDTØ1		3. CONTROL CARD ID *(See Block 4, DA Form 4743)* PØ1AUD-CNTL	
4. CONTROL CARD INSTRUCTIONS *(See Block 8, DA Form 4743)*			
FIELD a.	POSITION b.	PREPARATION INSTRUCTIONS c.	RESPONSIBLE AGENCY d.
CMD-4	33 35	4th command code; numeric or blank	Functional user
	36	Blank	
CMD-5	37 39	5th command code; numeric or blank	Functional user
	4Ø	Blank	
	41 47	Literal "TRANTP="	
TRANS-TAPE	48	"Y" if there are transactions on tape to be input. "N" if all input transactions are in card form.	Functional user
	49	Blank	
	5Ø 55	Literal "CTLTP="	
CTL-FILE-IN	56	"Y" if control file (AOAAUD) is to be input; else "N".	Functional user
	57	Blank	
	58 65	Literal "CARDOUT="	
CARD-RQMT	66	"Y" if punched output of updated MCF is desired; else "N".	Functional user
	67 8Ø	Blank	
NOTE: Columns 1-11, 13, 21-23, 48, 56, and 66 are critical; others (literals and blanks) are for visual readability only and are not edited by program.			

DA FORM 1 NOV 78 4743-1

Figure 3.4-01

JOB CONTROL STATEMENTS (PROC) - OS

```
//AUDTØ1S1 PROC CYC=COB
//*
//*  ********************************************************************
//*  *   THIS PROC PERFORMS THE CABS MASTER CODE FILE EDIT/UPDATE  *
//*  ********************************************************************
//*
//PØ1AUDØ1 EXEC PGM=PØ1AUD
//IAØAAUD  DD DSN=AUD.CABS.&CYC..AØAAUD(Ø),DISP=OLD,UNIT=(TAPE9,,DEFER)
//IAØ1AUD  DD DSN=AUD.CABS.&CYC..AØ1AUD(Ø),DISP=OLD,UNIT=(TAPE9,,DEFER)
//OAØ1AUD  DD DSN=AUD.CABS.&CYC..AØ1AUD(+1),DISP=(NEW,CATLG,DELETE),
//         UNIT=(TAPE9),LABEL=RETPD=365,
//         DCB=(RECFM=BFS,BLKSIZE=8ØØ,LRECL=8Ø)
//IBØ1AUD  DD DUMMY,DISP=(OLD,KEEP),UNIT=(TAPE9,,DEFER),
//         DCB=(RECFM=BFS,BLKSIZE=8ØØ,LRECL=8Ø)
//OEØ1AUD  DD SYSOUT=A,DCB=BLKSIZE=133
//OFØ1AUD  DD SYSOUT=B,DCB=BLKSIZE=8Ø
//WGØ1AUD  DD UNIT=SYSDA,SPACE=(CYL,(1Ø,5)),
//         DCB=(RECFM=BFS,BLKSIZE=8ØØ,LRECL=8Ø)
//WHØ1AUD  DD UNIT=SYSDA,SPACE=(CYL,(1Ø,5)),
//         DCB=(RECFM=BFS,BLKSIZE=8ØØ,LRECL=8Ø)
//SORTLIB  DD DSN=SYS1.SORTLIB,DISP=SHR
//SORTWKØ1 DD UNIT=SYSDA,SPACE=(CYL,5,,CONTIG)
//SORTWKØ2 DD UNIT=SYSDA,SPACE=(CYL,5,,CONTIG)
//SORTWKØ3 DD UNIT=SYSDA,SPACE=(CYL,5,,CONTIG)
//SYSOUT   DD SYSOUT=A
//SYSUDUMP DD SYSOUT=A
//ICØ1AUD  DD DUMMY,DCB=BLKSIZE=8Ø
```

Figure 3.4-01

JOB CONTROL STATEMENT CARD DECK LISTING - DOS

```
// JOB AUDTØ1   C1DØR       CABS MCF                          CYC=AOC
*  JOB STEP PØ1AUDØ1
// ASSGN SYSØØ1,X'DK2'           SORTWK
// ASSGN SYSØ14,X'CRØ'           CARD INPUT INCL CNTL & TRANS
// TLBL IAØAAUD,'AOC.AØAAUD'         CABS CONTROL FILE AOC
// TLBL IAØ1AUD,'AOC.AØ1AUD'         CABS MCF, OLD AOC
// TLBL IBØ1AUD,'AOC.BØ1AUD'         TAPE TRANS INPUT AOC
// TLBL OAØ1AUD,'AOC.AØ1AUD'         CABS MCF, NEW AOC
// DLBL OEØ1AUD,'EØ1AUD,D',Ø,SD       PRINTFILE, NO WRITE ON DOS
// EXTENT SYSØ21,WRK1&P,1,Ø,2Ø,1,B=1
// DLBL OFØ1AUD,'FØ1AUD,D',Ø,SD       PUNCHFILE, NO WRITE ON DOS
// EXTENT SYSØ21,WRK1&P,1,Ø,2Ø,1,B=1
// DLBL WGØ1AUD,'GØ1AUD,D',Ø,SD
// EXTENT SYSØ21,WRK1&P,1,Ø,2Ø,1ØØ,B=1
// DLBL WHØ1AUD,'HØ1AUD,D',Ø,SD
// EXTENT SYSØ22,WRK1&P,1,Ø,2Ø,1ØØ,B=1
// DLBL SORTWK1,'JØ1AUD',Ø,SD
// EXTENT SYSØØ1,WRK2&P,1,Ø,2Ø,1ØØ,B=1
// TLBL OYØ1AUD,'YØ1AUD'         SPOOL OUTPUT
// EXEC TDYNASN
OPEN OYØ1AUD,SYSØ13,OUTPUT
/*
// EXEC PØ1AUD
PØ1AUD-CNTL (User Control Card Options)
/*        INSERT ANY CARD TRANSACTIONS BEFORE THIS CARD
// EXEC TDYNASN
CLOSE OYØ1AUD,SYSØ13,OUTPUT
/*
CLOSE SYSØ13
/*
// DLBL OEØ1AUD,'EØ1AUD,D',Ø,SD       PRINTFILE, NO WRITE ON DOS
// EXTENT SYSØ21,WRK1&P,1,Ø,2Ø,1,B=1
// DLBL OFØ1AUD,'FØ1AUD,D',Ø,SD       PUNCHFILE, NO WRITE ON DOS
// EXTENT SYSØ21,WRK1&P,1,Ø,2Ø,1,B=1
// EXEC ADASD
/*
/&
```

Figure 3.4-01

JOB CONTROL STATEMENT CARD DECK LISTING - DOS (CONTINUED)

```
// JOB AUDTØ1   C1DØR       CABS MCF                          CYC=COB
*  JOB STEP PØ1AUDØ1
// ASSGN SYSØØ1,X'DK2'           SORTWK
// ASSGN SYSØ14,X'CRØ'           CARD INPUT INCL CNTL & TRANS
// TLBL IAØAAUD,'COB.AØAAUD'         CABS CONTROL FILE COB
// TLBL IAØ1AUD,'COB.AØ1AUD'         CABS MCF, OLD COB
// TLBL IBØ1AUD,'COB.BØ1AUD'         TAPE TRANS INPUT COB
// TLBL OAØ1AUD,'COB.AØ1AUD'         CABS MCF, NEW COB
// DLBL OEØ1AUD,'EØ1AUD,D',Ø,SD       PRINTFILE, NO WRITE ON DOS
// EXTENT SYSØ21,WRK1&P,1,Ø,2Ø,1,B=1
// DLBL OFØ1AUD,'FØ1AUD,D',Ø,SD       PUNCHFILE, NO WRITE ON DOS
// EXTENT SYSØ21,WRK1&P,1,Ø,2Ø,1,B=1
// DLBL WGØ1AUD,'GØ1AUD,D',Ø,SD
// EXTENT SYSØ21,WRK1&P,1,Ø,2Ø,1ØØ,B=1
// DLBL WHØ1AUD,'HØ1AUD,D',Ø,SD
// EXTENT SYSØ22,WRK1&P,1,Ø,2Ø,1ØØ,B=1
// DLBL SORTWK1,'JØ1AUD',Ø,SD
// EXTENT SYSØØ1,WRK2&P,1,Ø,2Ø,1ØØ,B=1
// TLBL OYØ1AUD,'YØ1AUD'         SPOOL OUTPUT
// EXEC TDYNASN
OPEN OYØ1AUD,SYSØ13,OUTPUT
/*
// EXEC PØ1AUD
PØ1AUD-CNTL (User Control Card Options)
/*        INSERT ANY CARD TRANSACTIONS BEFORE THIS CARD
// EXEC TDYNASN
CLOSE OYØ1AUD,SYSØ13,OUTPUT
/*
CLOSE SYSØ13
/*
// DLBL OEØ1AUD,'EØ1AUD,D',Ø,SD       PRINTFILE, NO WRITE ON DOS
// EXTENT SYSØ21,WRK1&P,1,Ø,2Ø,1,B=1
// DLBL OFØ1AUD,'FØ1AUD,D',Ø,SD       PUNCHFILE, NO WRITE ON DOS
// EXTENT SYSØ21,WRK1&P,1,Ø,2Ø,1,B=1
// EXEC ADASD
/*
/&
```

Figure 3.4-01

JOB CONTROL STATEMENT CARD DECK LISTING - DOS (CONTINUED)

```
// JOB AUDTØ1   C1DØR       CABS MCF                          CYC=OBL
*  JOB STEP PØ1AUDØ1
// ASSGN SYSØØ1,X'DK2'           SORTWK
// ASSGN SYSØ14,X'CRØ'           CARD INPUT INCL CNTL & TRANS
// TLBL IAØAAUD,'OBL.AØAAUD'         CABS CONTROL FILE OBL
// TLBL IAØ1AUD,'OBL.AØ1AUD'         CABS MCF, OLD OBL
 / TLBL IBØ1AUD,'OBL.BØ1AUD'         TAPE TRANS INPUT OBL
// TLBL OAØ1AUD,'OBL.AØ1AUD'         CABS MCF, NEW OBL
// DLBL OEØ1AUD,'EØ1AUD,D',Ø,SD        PRINTFILE, NO WRITE ON DOS
// EXTENT SYSØ21,WRK1&P,1,Ø,2Ø,1,B=1
// DLBL OFØ1AUD,'FØ1AUD,D',Ø,SD        PUNCHFILE, NO WRITE ON DOS
// EXTENT SYSØ21,WRK1&P,1,Ø,2Ø,1,B=1
// DLBL WGØ1AUD,'GØ1AUD,D',Ø,SD
// EXTENT SYSØ21,WRK1&P,1,Ø,2Ø,1ØØ,B=1
// DLBL WHØ1AUD,'HØ1AUD,D',Ø,SD
// EXTENT SYSØ22,WRK1&P,1,Ø,2Ø,1ØØ,B=1
// DLBL SORTWK1,'JØ1AUD',Ø,SD
// EXTENT SYSØØ1,WRK2&P,1,Ø,2Ø,1ØØ,B=1
// TLBL OYØ1AUD,'YØ1AUD'         SPOOL OUTPUT
// EXEC TDYNASN
OPEN OYØ1AUD,SYSØ13,OUTPUT
/*
// EXEC PØ1AUD
PØ1AUD-CNTL (User Control Card Options)
/*        INSERT ANY CARD TRANSACTIONS BEFORE THIS CARD
// EXEC TDYNASN
CLOSE OYØ1AUD,SYSØ13,OUTPUT
/*
CLOSE SYSØ13
/*
// DLBL OEØ1AUD,'EØ1AUD,D',Ø,SD        PRINTFILE, NO WRITE ON DOS
// EXTENT SYSØ21,WRK1&P,1,Ø,2Ø,1,B=1
// DLBL OFØ1AUD,'FØ1AUD,D',Ø,SD        PUNCHFILE, NO WRITE ON DOS
// EXTENT SYSØ21,WRK1&P,1,Ø,2Ø,1,B=1
// EXEC ADASD
/*
/&
```

Figure 3.4-01

CONTROL STATEMENT CARD DECK LISTING - DOS (CONTINUED)

```
ΓØ1   C1DØR       CABS MCF                          CYC=SOR
' PØ1AUDØ1
/SØØ1,X'DK2'           SORTWK
/SØ14,X'CRØ'           CARD INPUT INCL CNTL & TRANS
)AAUD,'SOR.AØAAUD'         CABS CONTROL FILE SOR
)1AUD,'SOR.AØ1AUD'         CABS MCF, OLD SOR
)1AUD,'SOR.BØ1AUD'         TAPE TRANS INPUT SOR
)1AUD,'SOR.AØ1AUD'         CABS MCF, NEW SOR
)1AUD,'EØ1AUD,D',Ø,SD        PRINTFILE, NO WRITE ON DOS
;YSØ21,WRK1&P,1,Ø,2Ø,1,B=1
)1AUD,'FØ1AUD,D',Ø,SD        PUNCHFILE, NO WRITE ON DOS
;YSØ21,WRK1&P,1,Ø,2Ø,1,B=1
)1AUD,'GØ1AUD,D',Ø,SD
;YSØ21,WRK1&P,1,Ø,2Ø,1ØØ,B=1
)1AUD,'HØ1AUD,D',Ø,SD
;YSØ22,WRK1&P,1,Ø,2Ø,1ØØ,B=1
RTWK1,'JØ1AUD',Ø,SD
;YSØØ1,WRK2&P,1,Ø,2Ø,1ØØ,B=1
)1AUD,'YØ1AUD'         SPOOL OUTPUT
/NASN
JD,SYSØ13,OUTPUT

LAUD
. (User Control Card Options)
INSERT ANY CARD TRANSACTIONS BEFORE THIS CARD
/NASN
\UD,SYSØ13,OUTPUT

L3

)1AUD,'EØ1AUD,D',Ø,SD        PRINTFILE, NO WRITE ON DOS
;YSØ21,WRK1&P,1,Ø,2Ø,1,B=1
)1AUD,'FØ1AUD,D',Ø,SD        PUNCHFILE, NO WRITE ON DOS
;YSØ21,WRK1&P,1,Ø,2Ø,1,B=1
\SD
```

Figure 3.4-01

JOB CONTROL STATEMENTS (RETRIEVAL) - OS

RUN ID: AUDTØ1
RUN NAME: CABS MASTER CODE FILE EDIT/UPDATE

("INITIAL" or "UPDATE" RUN)

```
//AUDTØ1   JOB (accounting information)
//AUDTØ1Ø1 EXEC AUDTØ1S1,CYC=XXX (see note 1)
//PØ1AUDØ1.ICØ1AUD DD *
PØ1AUD-CNTL                        (user control card options)

/*          INSERT MCF TRANSACTION CARDS BEFORE THIS CARD
//
```

NOTE: If MCF transaction input on tape (optional),
insert the following card after "EXEC" card:

```
//PØ1AUDØ1.IBØ1AUD DD DSN=XXXXXX,VOL=SER=NNNNNN
```

(LIST RUNS ONLY)

```
//AUDTØ1  JOB (accounting information)
//AUDTØ1Ø1 EXEC AUDTØ1S1,CYC=XXX (see note 1)
//PØ1AUDØ1.OAØ1AUD DD DUMMY
//PØ1AUDØ1.ICØ1AUD DD *
PØ1AUD-CNTL X      (COL 13 EQUAL TO "F" OR "C" FOR FYDP OR "CAT" LISTING)

/*        IF 'CAT' LISTING, MCF CATEGORY CARDS GO BEFORE THIS CARD
//
```

NOTE 1 : On EXEC CARD substitute for XXX the appropriate value to indicate type of run:

COB, AOC, OBL, SOR

Figure 3.4-01

RUN SETUP—CONSOLE OPERATING INFORMATION

For use of this form, see TB 18-111; the proponent agency is CSA.

1. DATE: 811201

2. RUN ID	3. RUN TITLE	4. SECLAS/PRIV
AUDTØ1	CABS MASTER CODE FILE EDIT/UPDATE	U/N

6. CORE REQ	7. POINT OF CONTACT	8. RUN AS OF	9. RUN DATE
7ØK			

10. CONT CD ID	11. DATE/TIME SCH IN	12. DATE/TIME SCH OUT
PØ1AUD-CNTL		

13. SYSTEM	14. RUN NO.	15. EST TIME	16. LANGUAGE
OS/DOS		5 MIN	COBOL

5. PERIPHERAL EQUIPMENT

TAPE DRIVES	2
DISK DRIVES	1
CARD READER	1
CARD PUNCH	1
PRINTER	1
OTHER	Ø

17. ID CODE	18. FILE ID	19. VOLUME NO.	20. I/O	21. MEDIA	22. UNIT	23. RETN	24. SECLAS/ PRIV	25. SOURCE	26. DISPOSITION	27. OPERATOR NOTES
PØ1AUDØ1	AØAAUD1/		I	TAPE			U/N	LIBRARY	LIBRARY	
	AØ1AUD1/		I	TAPE			U/N	LIBRARY	LIBRARY	
	AØ1AUD1/		O	TAPE		D365	U/N	SCRATCH	LIBRARY	
	BØ1AUD1/		I	TAPE			U/N	LIBRARY	LIBRARY	
	CØ1AUD		I	CARD	SYSCR/ SYSIPT		U/N	DATA CONTROL	DATA CONTROL	
(OS)	EØ1AUD		O	DISK			U/N	SCRATCH	SPOOL	
			O	LIST	SYSPR		U/N	DISK	DATA CONTROL	
(OS)	FØ1AUD1/		O	DISK			U/N	SCRATCH	SPOOL	
			O	CARD	SYSCP		U/N	DISK	DATA CONTROL	
(DOS)	YØ1AUD		O	TAPE			U/N	SCRATCH	SPOOL	

28. REMARKS

1/ OPTIONAL, depending on parameters in Control Card.

DA FORM 1 NOV 78 4744

☆U.S. Government Printing Office: 1980—310-981/8838

Figure 3.4-01

RUN MESSAGES AND RESPONSES For use of this form, see TB 18-111; the proponent agency is CSA.	1. DATE 811201
2. RUN ID AUDTØ1	3. RUN TITLE CABS MASTER CODE FILE EDIT/UPDATE

4. MESSAGE DISPLAYED	5. ACTION REQUIRED
CONSOLE MESSAGES:	
SAME AS SYSOUT/SYSLST	
SYSOUT/SYSLST MESSAGES:	
PØ1AUD 11 H * * CTL CARD ERROR	First card input must be a valid PØ1AUD-CNTL card. Correct or insert control card and restart the run.
* EXCESS RSN CARDS	For "CAT" listing, program allows maximum of 6Ø input cards. Notify functional user.
* INVALID SORT	Restart the run. If problem recurs, notify system analyst.

6. REMARKS

DA FORM 1 NOV 78 4745

Figure 3.4-01

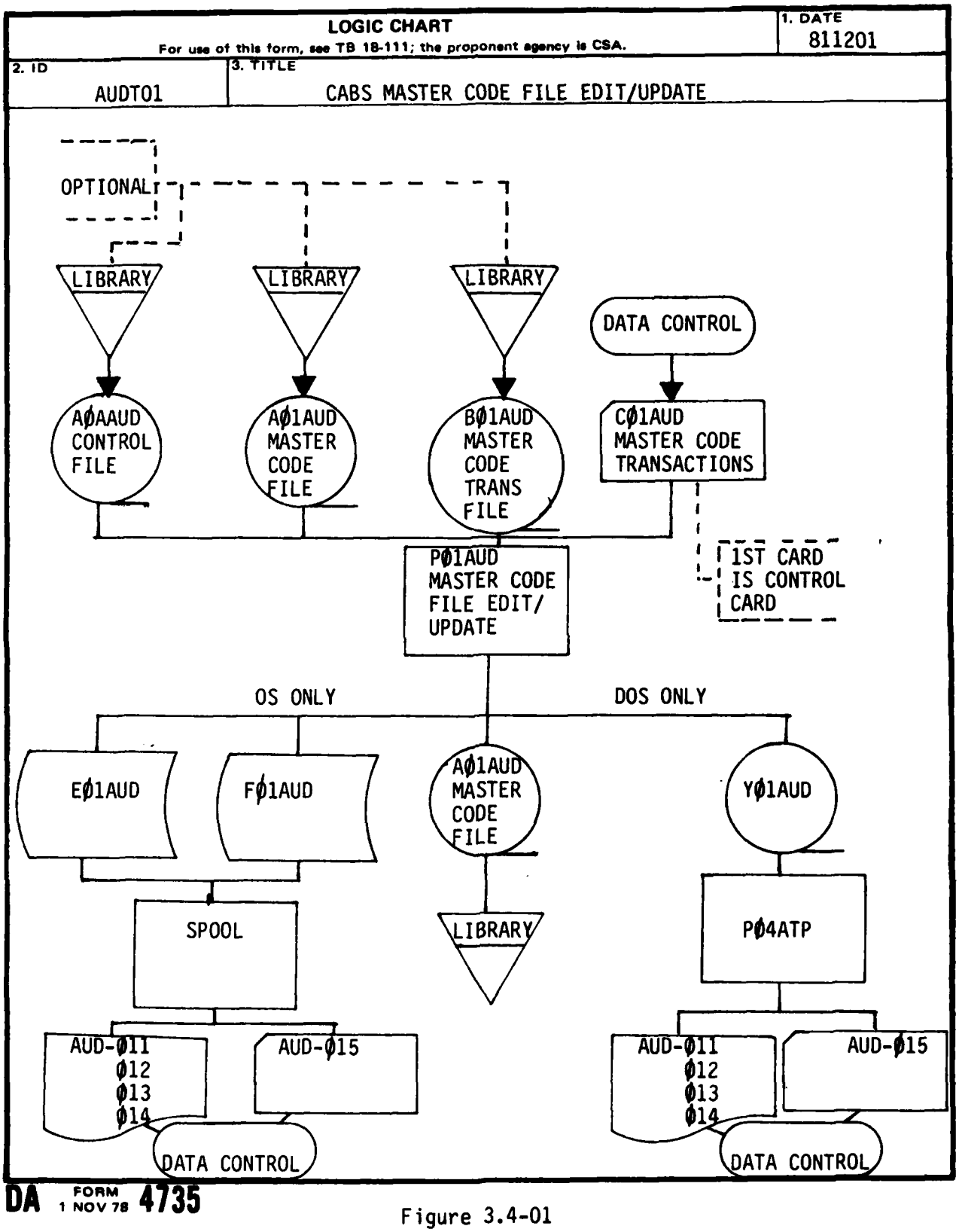

DA FORM 1 NOV 78 4735

Figure 3.4-01

OUTPUT REPORTS

For use of this form, see TB 18-111; the proponent agency is CSA.

1. RUN ID	2. DATE
AUDTØ1	811201

3. FILE ID	4. MEDIA	5. PCN/RCS	6. SECLAS/ PRIV	7. PRINTER					8. VOLUME	9. REPORT TITLE	10. DISPOSITION
				PAPER a.	NO. OF CYS b.	TAPE c.	PRINT POS d.	LINE UP e.			
CØ1AUD	CARD	NA	U/N							MASTER CODE FILE TRANSACTION CARD	PGM/BDGT DIVISION
EØ1AUD	DISK	AUD-Ø11	U/N							CABS MASTER CODE FILE EDIT/UPDATE REGISTER	PGM/BDGT DIVISION
EØ1AUD	DISK	AUD-Ø12	U/N							CABS MASTER CODE FILE LISTING - RSN SEQUENCE	PGM/BDGT DIVISION
EØ1AUD	DISK	AUD-Ø13	U/N							CABS MASTER CODE FILE LISTING - FYDP SEQUENCE	PGM/BDGT DIVISION
EØ1AUD	DISK	AUD-Ø14	U/N							CABS MASTER CODE FILE LISTING - FYDP WITHIN CATEGORY OF DATA (I.E. DOLLARS, MANYEARS, END STRENGTH, WORK-LOAD) SEQUENCE	PGM/BDGT DIVISION
FØ1AUD	DISK	AUD-Ø15	U/N							MASTER CODE FILE	PGM/BDGT DIVISION

11. REMARKS

Figure 3.4-01

RECOVERY INSTRUCTIONS For use of this form, see TB 18-111; the proponent agency is CSA.	1. DATE 811201
2. RUN ID AUDTØ1	3. RUN TITLE CABS MASTER CODE FILE EDIT/UPDATE
4. ID CODE	5. RECOVERY INSTRUCTIONS
PØ1AUDØ1	Restart the run
6. REMARKS	

DA FORM 1 NOV 78 4751

Figure 3.4-01

3.5 Run Description AUDTØ2. Reference Figure 3.5-01

INDEX FOR FIGURE 3.5-01

	NAME	PAGE NO.
3.5.1	Control Inputs	
3.5.1.1	Control Cards	3-34
3.5.1.2	Control Input Statements	NA
3.5.1.2.1	Job Control Statements (PROC)	3-35 thru 3-39
3.5.1.2.2	Job Control Statements (RETRIEVAL)	3-40
3.5.2	Management Information	
3.5.2.1	Run Setup-Console Operating Information	3-41 thru 3-42
3.5.2.2	Run Messages and Responses	3-43 thru 3-44
3.5.2.3	Logic Chart	3-45 thru 3-47
3.5.3	Input-Output Files	See DA Form 4744 for the I/O File Information
3.5.4	Output Reports	3-48
3.5.5	Reproduced Output Reports	
3.5.5.1	Reproduced Output Reports	NA
3.5.5.2	PCM Processing Instructions	NA
3.5.6	Restart/Recovery Procedures	
3.5.6.1	Recovery Instructions	3-49

CONTROL CARD PREPARATION
For use of this form, see TB 18-111, the proponent agency is CSA.

1. DATE: 811201

2. RUN ID: AUDTØ2

3. RUN TITLE: CABS BUDGET DATA EDIT/UPDATE

4. CONTROL CARD ID: PØ2AUD-CNTL

5. CONTROL CARD TITLE: PØ2AUD-CONTROL-CARD

6. CONTROL CARD PURPOSE AND REMARKS

To provide program parameter options.

7. USER INFORMATION, IF REQUIRED

8. CONTROL CARD INSTRUCTIONS

FIELD a.	POSITION b.	PREPARATION INSTRUCTIONS c.	RESPONSIBLE AGENCY d.
CNTL-ID	1 11	Constant "PØ2AUD-CNTL"	
	12	Blank	
UPDATE-CNTL	13 19	"UPDATE" To update existing file "INITIAL" To create new budget file	Functional user
	2Ø	Blank	
MEDIA	21	"C" card input transactions "T" tape input transactions " " for both tape and card transaction	Functional user
	22	Blank	
DATA-TYPE	23	"1" consolidated data Blank if detailed data	Functional user
	24	Blank	
COMMENT-BYPASS	25	"X" = BYPASS COMMENTS	Functional
	26	Blank	
LEVEL	27 29	"STA" for installation run; "MAC" for MACOM	Functional
	3Ø	Blank	
DELETE-OPTION	31	"D" to remove all "deleted" records (Transaction Code '1') and blank the transaction code on other records from the input Budget Data File.	Functional user
	32-8Ø	Blank	

DA FORM 1 NOV 78 4743

Figure 3.5-01

JOB CONTROL STATEMENT (PROC) - OS

```
//AUDTØ2S1 PROC CYC=COB
//*
//*  ****************************************************************
//*  *  THIS PROC PERFORMS THE CABS BUDGET DATA EDIT/UPDATE         *
//*  ****************************************************************
//*
//IEBGENØ2 EXEC PGM=IEBGENER
//SYSPRINT DD SYSOUT=A
//SYSUT1   DD DSN=AUD.CABS.&CYC..AØ1AUD(Ø),DISP=OLD
//SYSUT2   DD DSN=AUD.CABS.AØ1AUD,UNIT=SYSDA,SPACE=(CYL,(1Ø,5)),
//         DISP=(NEW,PASS),DCB=(RECFM=BFS,BLKSIZE=8ØØ,LRECL=8Ø)
//SYSIN    DD DUMMY
//PØ2AUDØ3 EXEC PGM=PØ2AUD
//ICØ2AUD  DD DUMMY,DCB=BLKSIZE=8Ø
//IAØAAUD  DD DSN=AUD.CABS.&CYC..AØAAUD(Ø),UNIT=TAPE9,DISP=OLD
//IAØ1AUD  DD DSN=AUD.CABS.AØ1AUD,DISP=(OLD,DELETE)
//IAØ2AUD  DD DUMMY,UNIT=(TAPE9,,DEFER),DISP=(OLD,KEEP),
//         DCB=(RECFM=BFS,BLKSIZE=8ØØ,LRECL=8Ø)
//IBØ2AUD  DD DSN=AUD.CABS.&CYC..BØ2AUD(+Ø),UNIT=(TAPE9,,DEFER),
//         DISP=(OLD,KEEP)
//OBØ2AUD  DD DSN=AUD.CABS.&CYC..BØ2AUD(+1),UNIT=(TAPE9,,DEFER),
//         DISP=(NEW,CATLG,DELETE),
//         DCB=(RECFM=BFS,BLKSIZE=8ØØ,LRECL=8Ø),
//         LABEL=RETPD=365
//OFØ2AUD  DD SYSOUT=A,DCB=BLKSIZE=133
//WGØ2AUD  DD UNIT=SYSDA,SPACE=(CYL,4Ø),
//         DCB=(RECFM=BFS,BLKSIZE=8ØØ,LRECL=8Ø)
//WHØ2AUD  DD UNIT=SYSDA,SPACE=(CYL,4Ø),
//         DCB=(RECFM=BFS,BLKSIZE=8ØØ,LRECL=8Ø)
//SORTWKØ1 DD UNIT=SYSDA,SPACE=(CYL,2Ø,,CONTIG)
//SORTWKØ2 DD UNIT=SYSDA,SPACE=(CYL,2Ø,,CONTIG)
//SORTWKØ3 DD UNIT=SYSDA,SPACE=(CYL,2Ø,,CONTIG)
//SORTLIB  DD DSN=SYS1.SORTLIB,DISP=SHR
//SYSOUT   DD SYSOUT=A
//SYSUDUMP DD SYSOUT=A
//IEØ2AUD  DD DUMMY,DCB=BLKSIZE=8Ø
```

Figure 3.5-01

JOB CONTROL STATEMENT CARD DECK LISTING - DOS

```
// JOB   AUDTØ2  C1DOR      CABS EDIT/UPDATE              CYC=AOC
*  JOB STEP PØ2AUDØ1
// TLBL UIN,'AOC.AØ1AUD'
// DLBL UOUT,'AA1AUD',Ø,SD
// EXTENT SYSØ21,WRK1&P,1,Ø,2Ø,Ø6Ø,B=1
// EXEC TDYNASN
// ASSGN SYSØØ4,DUMMY
/*
// EXEC TPDK
// UTD TC,FF,A=(Ø8Ø,Ø8ØØ),B=(Ø8Ø,Ø8ØØ),IU,OY,R1,E=(2314)
// END
// ASSGN SYSØØ1,X'DK2'
// ASSGN SYSØ14,X'CRØ'          CARD INPUT
// TLBL IAØAAUD,'AOC.AØAAUD'       CABS CONTROL FILE INPUT AOC
// TLBL IAØ2AUD,'AOC.AØ2AUD'       CABS TRANSACTIONS AOC
// TLBL IBØ2AUD,'AOC.BØ2AUD'       CABS BUDGET DATA OLD AOC
// TLBL OBØ2AUD,'AOC.BØ2AUD'       CABS BUDGET DATA NEW AOC
// DLBL IAØ1AUD,'AA1AUD',Ø,SD
// EXTENT SYSØ21,WRK1&P,1,Ø,2Ø,Ø6Ø,B=1
// DLBL ICØ2AUD,'CØ2AUD,D',Ø,SD    CABS CONTROL CARD
// EXTENT SYSØ2Ø,WRK1&P,1,Ø,2Ø,1,B=1
// DLBL IEØ2AUD,'EØ2AUD',Ø,SD  CABS INPUT TRANS
// EXTENT SYSØ2Ø,WRK1&P,1,Ø,2Ø,1,B=1
// DLBL OFØ2AUD,'FØ2AUD',Ø,SD  PRINTFILE
// EXTENT SYSØ2Ø,WRK1&P,1,Ø,2Ø,1,B=1
// DLBL WGØ2AUD,'GØ2AUD,D',Ø,SD
// EXTENT SYSØ21,WRK1&P,1,Ø,2Ø,1ØØ,B=1
// DLBL WHØ2AUD,'HØ2AUD,D',Ø,SD
// EXTENT SYSØ21,WRK1&P,1,Ø,2Ø,1ØØ,B=1
// DLBL SORTWK1,'JØ2AUD',Ø,SD
// EXTENT SYSØØ1,WRK2&P,1,Ø,2Ø,1ØØ,B=1
// TLBL OYØ2AUD,'YØ2AUD'        SPOOL OUTPUT
// EXEC TDYNASN
OPEN OYØ2AUD,SYSØ13,OUTPUT
/*
// EXEC PØ2AUD
/*       PLACE PØ2AUD CONTROL CARD AND DATA CARDS BEFORE THIS CARD
// EXEC TDYNASN
CLOSE OYØ2AUD,SYSØ13,OUTPUT
/*
CLOSE SYSØ13
/*
// DLBL IAØ1AUD,'AA1AUD'
// EXTENT SYSØ21,WRK1&P,1,Ø,2Ø,Ø6Ø,B=1
// DLBL IEØ2AUD,'EØ2AUD',Ø,SD  CABS INPUT TRANS
// EXTENT SYSØ2Ø,WRK1&P,1,Ø,2Ø,1,B=1
// DLBL OFØ2AUD,'FØ2AUD',Ø,SD  PRINTFILE
// EXTENT SYSØ2Ø,WRK1&P,1,Ø,2Ø,1,B=1
// EXEC ADASD
/*
/&
```

Figure 3.5-01

JOB CONTROL STATEMENT CARD DECK LISTING - DOS (CONTINUED)

```
// JOB   AUDTØ2  C1DOR      CABS EDIT/UPDATE                CYC=COB
*  JOB STEP PØ2AUDØ1
// TLBL UIN,'COB.AØ1AUD'
// DLBL UOUT,'AA1AUD',Ø,SD
// EXTENT SYSØ21,WRK1&P,1,Ø,2Ø,Ø6Ø,B=1
// EXEC TDYNASN
// ASSGN SYSØØ4,DUMMY
/*
// EXEC TPDK
// UTD TC,FF,A=(Ø8Ø,Ø8ØØ),B=(Ø8Ø,Ø8ØØ),IU,OY,R1,E=(2314)
// END
// ASSGN SYSØØ1,X'DK2'
// ASSGN SYSØ14,X'CRØ'          CARD INPUT
// TLBL IAØAAUD,'COB.AØAAUD'       CABS CONTROL FILE INPUT COB
// TLBL IAØ2AUD,'COB.AØ2AUD'       CABS TRANSACTIONS COB
// TLBL IBØ2AUD,'COB.BØ2AUD'       CABS BUDGET DATA OLD COB
// TLBL OBØ2AUD,'COB.BØ2AUD'       CABS BUDGET DATA NEW COB
// DLBL IAØ1AUD,'AA1AUD',Ø,SD
// EXTENT SYSØ21,WRK1&P,1,Ø,2Ø,Ø6Ø,B=1
// DLBL ICØ2AUD,'CØ2AUD,D',Ø,SD    CABS CONTROL CARD
// EXTENT SYSØ2Ø,WRK1&P,1,Ø,2Ø,1,B=1
// DLBL IEØ2AUD,'EØ2AUD',Ø,SD  CABS INPUT TRANS
// EXTENT SYSØ2Ø,WRK1&P,1,Ø,2Ø,1,B=1
// DLBL OFØ2AUD,'FØ2AUD',Ø,SD  PRINTFILE
// EXTENT SYSØ2Ø,WRK1&P,1,Ø,2Ø,1,B=1
// DLBL WGØ2AUD,'GØ2AUD,D',Ø,SD
// EXTENT SYSØ21,WRK1&P,1,Ø,2Ø,1ØØ,B=1
// DLBL WHØ2AUD,'HØ2AUD,D',Ø,SD
// EXTENT SYSØ21,WRK1&P,1,Ø,2Ø,1ØØ,B=1
// DLBL SORTWK1,'JØ2AUD',Ø,SD
// EXTENT SYSØØ1,WRK2&P,1,Ø,2Ø,1ØØ,B=1
// TLBL OYØ2AUD,'YØ2AUD'       SPOOL OUTPUT
// EXEC TDYNASN
OPEN OYØ2AUD,SYSØ13,OUTPUT
/*
// EXEC PØ2AUD
/*       PLACE PØ2AUD CONTROL CARD AND DATA CARDS BEFORE THIS CARD
// EXEC TDYNASN
CLOSE OYØ2AUD,SYSØ13,OUTPUT
/*
CLOSE SYSØ13
/*
// DLBL IAØ1AUD,'AA1AUD'
// EXTENT SYSØ21,WRK1&P,1,Ø,2Ø,Ø6Ø,B=1
// DLBL IEØ2AUD,'EØ2AUD',Ø,SD  CABS INPUT TRANS
// EXTENT SYSØ2Ø,WRK1&P,1,Ø,2Ø,1,B=1
// DLBL OFØ2AUD,'FØ2AUD',Ø,SD  PRINTFILE
// EXTENT SYSØ2Ø,WRK1&P,1,Ø,2Ø,1,B=1
// EXEC ADASD
/*
/&
```

Figure 3.5-01

JOB CONTROL STATEMENT CARD DECK LISTING - DOS (CONTINUED)

```
// JOB   AUDTØ2  C1DOR      CABS EDIT/UPDATE                CYC=OBL
*  JOB STEP PØ2AUDØ1
// TLBL UIN,'OBL.AØ1AUD'
// DLBL UOUT,'AA1AUD',Ø,SD
// EXTENT SYSØ21,WRK1&P,1,Ø,2Ø,Ø6Ø,B=1
// EXEC TDYNASN
// ASSGN SYSØØ4,DUMMY
/*
// EXEC TPDK
// UTD TC,FF,A=(Ø8Ø,Ø8ØØ),B=(Ø8Ø,Ø8ØØ),IU,OY,R1,E=(2314)
// END
// ASSGN SYSØØ1,X'DK2'
// ASSGN SYSØ14,X'CRØ'          CARD INPUT
// TLBL IAØAAUD,'OBL.AØAAUD'       CABS CONTROL FILE INPUT OBL
// TLBL IAØ2AUD,'OBL.AØ2AUD'       CABS TRANSACTIONS OBL
// TLBL IBØ2AUD,'OBL.BØ2AUD'       CABS BUDGET DATA OLD OBL
// TLBL OBØ2AUD,'OBL.BØ2AUD'       CABS BUDGET DATA NEW OBL
// DLBL IAØ1AUD,'AA1AUD',Ø,SD
// EXTENT SYSØ21,WRK1&P,1,Ø,2Ø,Ø6Ø,B=1
// DLBL ICØ2AUD,'CØ2AUD,D',Ø,SD    CABS CONTROL CARD
// EXTENT SYSØ2Ø,WRK1&P,1,Ø,2Ø,1,B=1
// DLBL IEØ2AUD,'EØ2AUD',Ø,SD  CABS INPUT TRANS
// EXTENT SYSØ2Ø,WRK1&P,1,Ø,2Ø,1,B=1
// DLBL OFØ2AUD,'FØ2AUD',Ø,SD  PRINTFILE
// EXTENT SYSØ2Ø,WRK1&P,1,Ø,2Ø,1,B=1
// DLBL WGØ2AUD,'GØ2AUD,D',Ø,SD
// EXTENT SYSØ21,WRK1&P,1,Ø,2Ø,1ØØ,B=1
// DLBL WHØ2AUD,'HØ2AUD,D',Ø,SD
// EXTENT SYSØ21,WRK1&P,1,Ø,2Ø,1ØØ,B=1
// DLBL SORTWK1,'JØ2AUD',Ø,SD
// EXTENT SYSØØ1,WRK2&P,1,Ø,2Ø,1ØØ,B=1
// TLBL OYØ2AUD,'YØ2AUD'        SPOOL OUTPUT
// EXEC TDYNASN
OPEN OYØ2AUD,SYSØ13,OUTPUT
/*
// EXEC PØ2AUD
/*       PLACE PØ2AUD CONTROL CARD AND DATA CARDS BEFORE THIS CARD
// EXEC TDYNASN
CLOSE OYØ2AUD,SYSØ13,OUTPUT
/*
CLOSE SYSØ13
/*
// DLBL IAØ1AUD,'AA1AUD'
// EXTENT SYSØ21,WRK1&P,1,Ø,2Ø,Ø6Ø,B=1
// DLBL IEØ2AUD,'EØ2AUD',Ø,SD  CABS INPUT TRANS
// EXTENT SYSØ2Ø,WRK1&P,1,Ø,2Ø,1,B=1
// DLBL OFØ2AUD,'FØ2AUD',Ø,SD  PRINTFILE
// EXTENT SYSØ2Ø,WRK1&P,1,Ø,2Ø,1,B=1
// EXEC ADASD
/*
/&
```

Figure 3.5-01

JOB CONTROL STATEMENT CARD DECK LISTING - DOS (CONTINUED)

```
// JOB   AUDTØ2  C1DOR      CABS EDIT/UPDATE                CYC=SOR
*  JOB STEP PØ2AUDØ1
// TLBL UIN,'SOR.AØ1AUD'
// DLBL UOUT,'AA1AUD',Ø,SD
// EXTENT SYSØ21,WRK1&P,1,Ø,2Ø,Ø6Ø,B=1
// EXEC TDYNASN
// ASSGN SYSØØ4,DUMMY
/*
// EXEC TPDK
// UTD TC,FF,A=(Ø8Ø,Ø8ØØ),B=(Ø8Ø,Ø8ØØ),IU,OY,R1,E=(2314)
// END
// ASSGN SYSØØ1,X'DK2'
// ASSGN SYSØ14,X'CRØ'          CARD INPUT
// TLBL IAØAAUD,'SOR.AØAAUD'        CABS CONTROL FILE INPUT SOR
// TLBL IAØ2AUD,'SOR.AØ2AUD'        CABS TRANSACTIONS SOR
// TLBL IBØ2AUD,'SOR.BØ2AUD'        CABS BUDGET DATA OLD SOR
// TLBL OBØ2AUD,'SOR.BØ2AUD'        CABS BUDGET DATA NEW SOR
// DLBL IAØ1AUD,'AA1AUD',Ø,SD
// EXTENT SYSØ21,WRK1&P,1,Ø,2Ø,Ø6Ø,B=1
// DLBL ICØ2AUD,'CØ2AUD,D',Ø,SD    CABS CONTROL CARD
// EXTENT SYSØ2Ø,WRK1&P,1,Ø,2Ø,1,B=1
// DLBL IEØ2AUD,'EØ2AUD',Ø,SD  CABS INPUT TRANS
// EXTENT SYSØ2Ø,WRK1&P,1,Ø,2Ø,1,B=1
// DLBL OFØ2AUD,'FØ2AUD',Ø,SD  PRINTFILE
// EXTENT SYSØ2Ø,WRK1&P,1,Ø,2Ø,1,B=1
// DLBL WGØ2AUD,'GØ2AUD,D',Ø,SD
// EXTENT SYSØ21,WRK1&P,1,Ø,2Ø,1ØØ,B=1
// DLBL WHØ2AUD,'HØ2AUD,D',Ø,SD
// EXTENT SYSØ21,WRK1&P,1,Ø,2Ø,1ØØ,B=1
// DLBL SORTWK1,'JØ2AUD',Ø,SD
// EXTENT SYSØØ1,WRK2&P,1,Ø,2Ø,1ØØ,B=1
// TLBL OYØ2AUD,'YØ2AUD'        SPOOL OUTPUT
// EXEC TDYNASN
OPEN OYØ2AUD,SYSØ13,OUTPUT
/*
// EXEC PØ2AUD
/*       PLACE PØ2AUD CONTROL CARD AND DATA CARDS BEFORE THIS CARD
// EXEC TDYNASN
CLOSE OYØ2AUD,SYSØ13,OUTPUT
/*
CLOSE SYSØ13
/*
// DLBL IAØ1AUD,'AA1AUD'
// EXTENT SYSØ21,WRK1&P,1,Ø,2Ø,Ø6Ø,B=1
// DLBL IEØ2AUD,'EØ2AUD',Ø,SD  CABS INPUT TRANS
// EXTENT SYSØ2Ø,WRK1&P,1,Ø,2Ø,1,B=1
// DLBL OFØ2AUD,'FØ2AUD',Ø,SD  PRINTFILE
// EXTENT SYSØ2Ø,WRK1&P,1,Ø,2Ø,1,B=1
// EXEC ADASD
/*
/&
```

Figure 3.5-01

JOB CONTROL STATEMENTS (RETRIEVAL) - OS

): AUDTØ2
\ME: CABS BUDGET DATA EDIT/UPDATE

TO PROCESS STATION LEVEL DATA

```
'Ø2   JOB (accounting information)
'Ø2Ø1   EXEC AUDTØ2S1,CYC=XXX (See note 2)
\UDØ3.ICØ2AUD DD *
)-CNTL (user control card options)

\UDØ3.IAØ2AUD DD DSN=NNNNNN,VOL=SER=XXXXXX  (see note 1)
\UDØ3.IEØ2AUD DD *
      INSERT BUDGET DATA TRANSACTION CARDS BEFORE THIS CARD
```

TO PROCESS CONSOLIDATED DATA

```
ΓØ2   JOB   (accounting information)
ΓØ2Ø1  EXEC AUDTØ2S1,CYC=XXX (See note 2)
\UDØ3.ICØ2AUD DD *
)-CNTL   (user control card options)

\UDØ3.IAØ2AUD DD DSN=NNNNNN,VOL=SER=XXXXXX  (see note 1)
\UDØ3.IBØ2AUD DD DSN=AUD.CABS.&CYC..BØ9AUD(Ø)
\UDØ3.OBØ2AUD DD DSN=AUD.CABS.&CYC..BØ9AUD(+1)
\UDØ3.IEØ2AUD DD *
      INSERT BUDGET DATA TRANSACTION CARDS BEFORE THIS CARD
```

1: Show DSN and Volume Serial Number of any budget data transaction tape (AØ2AUD).

2: On EXEC CARD, substitute for XXX the appropriate value to indicate type of run:

COB, AOC, OBL, SOR

Figure 3.5-01

RUN SETUP—CONSOLE OPERATING INFORMATION

For use of this form, see TB 18-111; the proponent agency is CSA.

1. DATE: 811201

2. RUN ID	3. RUN TITLE	4. SECLAS/PRIV
AUDTØ2	CABS BUDGET DATA EDIT/UPDATE	U/N

6. CORE REQ	7. POINT OF CONTACT	8. RUN AS OF	9. RUN DATE
78K			

10. CONT CD ID	11. DATE/TIME SCH IN	12. DATE/TIME SCH OUT
PØ2AUD-CNTL		

13. SYSTEM	14. RUN NO.	15. EST TIME	16. LANGUAGE
OS/DOS		5 MIN.	COBOL

5. PERIPHERAL EQUIPMENT

TAPE DRIVES	3 2/
DISK DRIVES	1
CARD READER	1
CARD PUNCH	Ø
PRINTER	1
OTHER	Ø

17. ID CODE	18. FILE ID	19. VOLUME NO.	20. I/O	21. MEDIA	22. UNIT	23. RETN	24. SECLAS/ PRIV	25. SOURCE	26. DISPOSITION	27. OPERATOR NOTES
IEBGENØ2	AØ1AUD		I	TAPE			U/N	LIBRARY	LIBRARY	
	AØ1AUD		O	DISK	SYSDA		U/N	SCRATCH	PØ2AUDØ3	
PØ2AUDØ3	AØAAUD		I	TAPE			U/N	LIBRARY	LIBRARY	
	AØ1AUD		I	DISK	SYSDA		U/N	IEBGENØ2	LIBRARY	
	AØ2AUD 1/		I	TAPE			U/N	LIBRARY	LIBRARY	
	BØ2AUD 1/		I	TAPE			U/N	LIBRARY	LIBRARY	

28. REMARKS

1/ OPTIONAL

2/ A minimum of 1 and a maximum of 2 tape drives are required for initial cycles. A minimum of 2 and a maximum of 3 tape drives are required for update cycles.

Figure 3.5-01

☆U.S. Government Printing Office: 1980—310-981/8838

RUN SETUP—CONSOLE OPERATING INFORMATION
For use of this form, see TB 18-111; the proponent agency is CSA.

1. DATE: 811201

2. RUN ID	3. RUN TITLE	4. SECLAS/PRIV	5. PERIPHERAL EQUIPMENT
AUDTØ2	CABS BUDGET DATA EDIT/UPDATE (CONTINUED)		TAPE DRIVES 2/

6. CORE REQ	7. POINT OF CONTACT	8. RUN AS OF	9. RUN DATE	DISK DRIVES
				CARD READER

10. CONT CD ID	11. DATE/TIME SCH IN	12. DATE/TIME SCH OUT	CARD PUNCH
			PRINTER

13. SYSTEM	14. RUN NO.	15. EST TIME	16. LANGUAGE	OTHER

17. ID CODE	18. FILE ID	19. VOLUME NO.	20. I/O	21. MEDIA	22. UNIT	23. RETN	24. SECLAS/ PRIV	25. SOURCE	26. DISPOSITION	27. OPERATOR NOTES
PØ2AUDØ3 (CONT.)	BØ2AUD 1/		O	TAPE		D365	U/N	SCRATCH	LIBRARY	
	BØ9AUD 1/		I	TAPE			U/N	LIBRARY	LIBRARY	
	BØ9AUD 1/		O	TAPE		D365	U/N	SCRATCH	LIBRARY	
	EØ2AUD 1/		I	CARD	SYSCR/ SYSIPT		U/N	DATA CONTROL	DATA CONTROL	
(OS)	FØ2AUD 1/		O	DISK	SYSDA		U/N	SCRATCH	SPOOL	
			O	LIST	SYSPR		U/N	DISK	DATA CONTROL	
(DOS)	YØ2AUD		O	TAPE			U/N	SCRATCH	SPOOL	

28. REMARKS

1/ OPTIONAL
2/ A minimum of 1 and a maximum of 2 tape drives are required for initial cycles. A minimum of 2 and a maximum of 3 tape drives are required for update cycles.

DA FORM 1 NOV 78 4744

☆U.S. Government Printing Office: 1980—310-981/8838

Figure 3.5-01

RUN MESSAGES AND RESPONSES For use of this form, see TB 18-111; the proponent agency is CSA.	1. DATE 811201
2. RUN ID AUDTØ2	3. RUN TITLE CABS BUDGET DATA EDIT/UPDATE

4. MESSAGE DISPLAYED	5. ACTION REQUIRED
CONSOLE MESSAGES:	
SAME AS SYSOUT/SYSLST	
SYSOUT/SYSLST MESSAGES:	
PØ2AUD Ø1 H NO INPUT DATA RCDS	There are no input transaction data records. The run is stopped. Notify the CABS analyst.
PØ2AUD Ø2 H INVALID SORT	The sort failed for an unknown reason. determine the cause for the failure, correct and restart the run.
PØ2AUD Ø3 H TYPE B RCDS EXCEED LIMIT	The type B control records exceed limit established in the users documentation. Update the control file. The run is stopped. Notify the CABS analyst.
PØ2AUD Ø4 H NO TYPE A RCD	The type A control record is missing. Update the control file. The run is stopped. Notify the CABS analyst.
PØ2AUD Ø5 H NO TYPE B RCDS	The type B control records are missing. Update the control file. The run is stopped. Notify the CABS analyst.

6. REMARKS

DA FORM 1 NOV 78 4745

Figure 3.5-01

RUN MESSAGES AND RESPONSES For use of this form, see TB 18-111; the proponent agency is CSA.	1. DATE 811201
2. RUN ID AUDTØ2	3. RUN TITLE CABS BUDGET DATA EDIT/UPDATE

4. MESSAGE DISPLAYED	5. ACTION REQUIRED
SYSOUT/SYSLST MESSAGES: (CONTINUED)	
PØ2AUD Ø6 H IND FIELD A EXCEEDS LIMIT	A limit of 13ØØ INDA has been established for the MCF. This limit has been exceeded. Contact Functional user. Correct limit on MCF and rerun.
PØ2AUD Ø7 H IND FIELD B EXCEEDS LIMIT	A limit of 4ØØ INDB.
PØ2AUD Ø8 H IND FIELD C EXCEEDS LIMIT	A limit of 4ØØ INDC.
PØ2AUD Ø9 H CONTROL CARD MISSING	The PØ2AUD-CNTL card is missing or not in proper place in JCL. Correct and rerun.
PØ2AUD 1Ø H SPOOL WRITE ERROR	An error has occurred (DOS only) while attempting to write to the spool tape. The run is stopped. Notify the CABS analyst.
PØ2AUD 11 H WRONG LENGTH RECORD	A wrong length record was encountered (DOS only) while reading input transactions. The run is stopped. Notify the CABS analyst.
PØ2AUD 12 H DOS EXTENTS EXCEEDED	Self-explanatory.
PØ2AUD 13 H NO VALID TRANS IN	All input transactions were rejected. No Output Budget Data File was created.

6. REMARKS

DA FORM 1 NOV 78 4745

Figure 3.5-01

LOGIC CHART For use of this form, see TB 18-111; the proponent agency is CSA.	1. DATE 811201
2. ID AUDT02	3. TITLE CABS BUDGET DATA EDIT/UPDATE

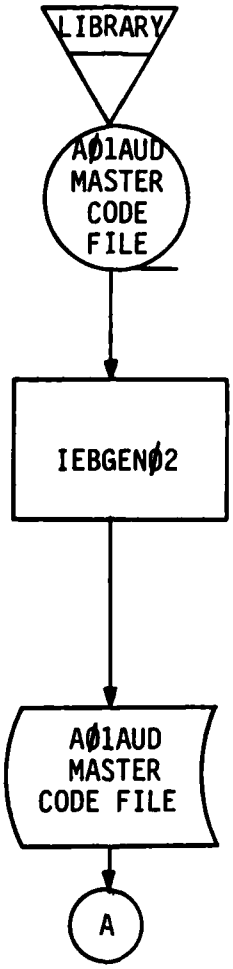

DA FORM 1 NOV 78 4735

Figure 3.5-01

LOGIC CHART For use of this form, see TB 18-111; the proponent agency is CSA.	1. DATE 811201
2. ID AUDTO2	3. TITLE CABS BUDGET DATA EDIT/UPDATE (CONTINUED)

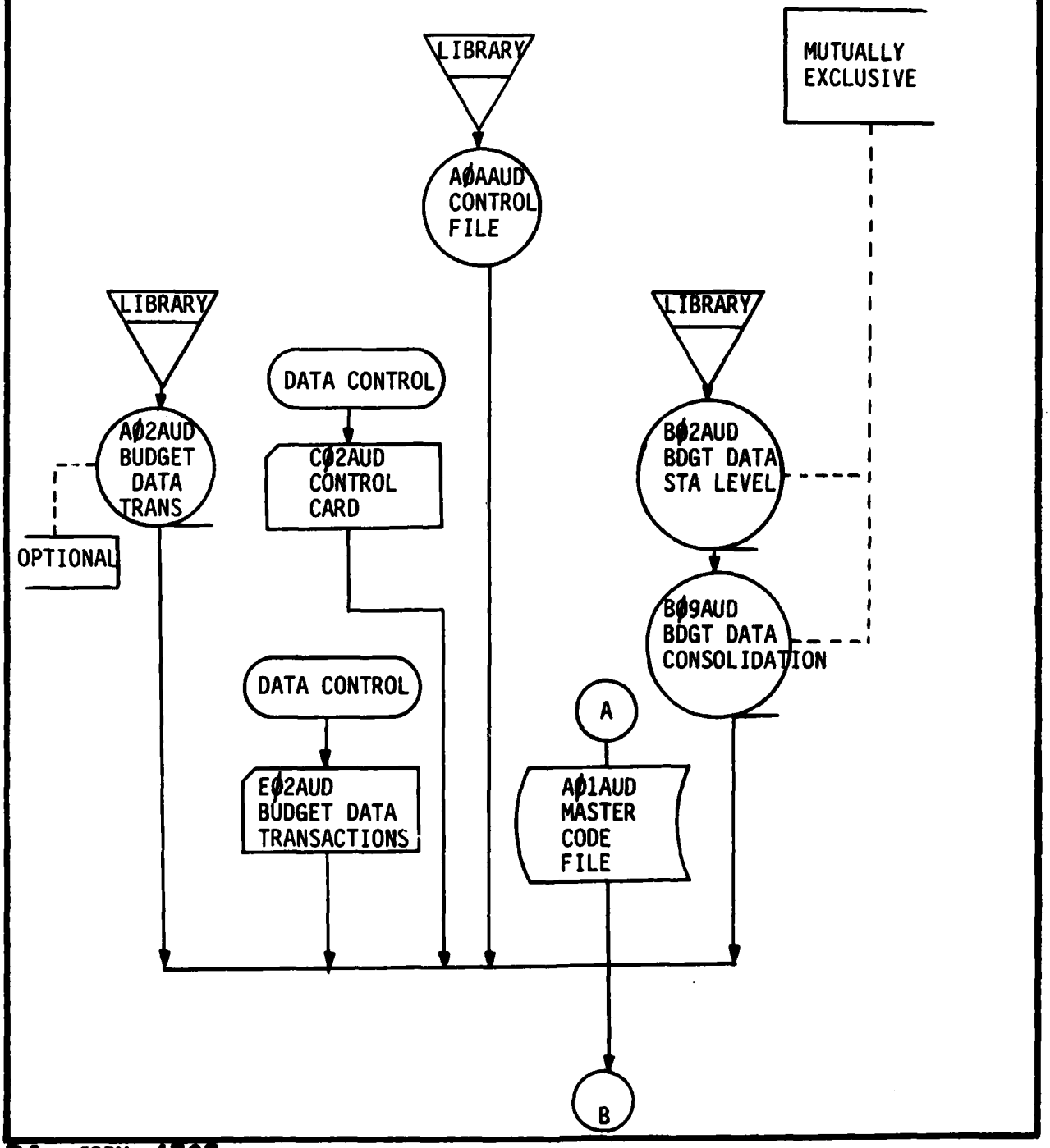

DA FORM 1 NOV 78 4735

Figure 3.5-01

LOGIC CHART For use of this form, see TB 18-111; the proponent agency is CSA.	1. DATE 811201
2. ID AUDT02	3. TITLE CABS BUDGET DATA EDIT/UPDATE (CONTINUED)

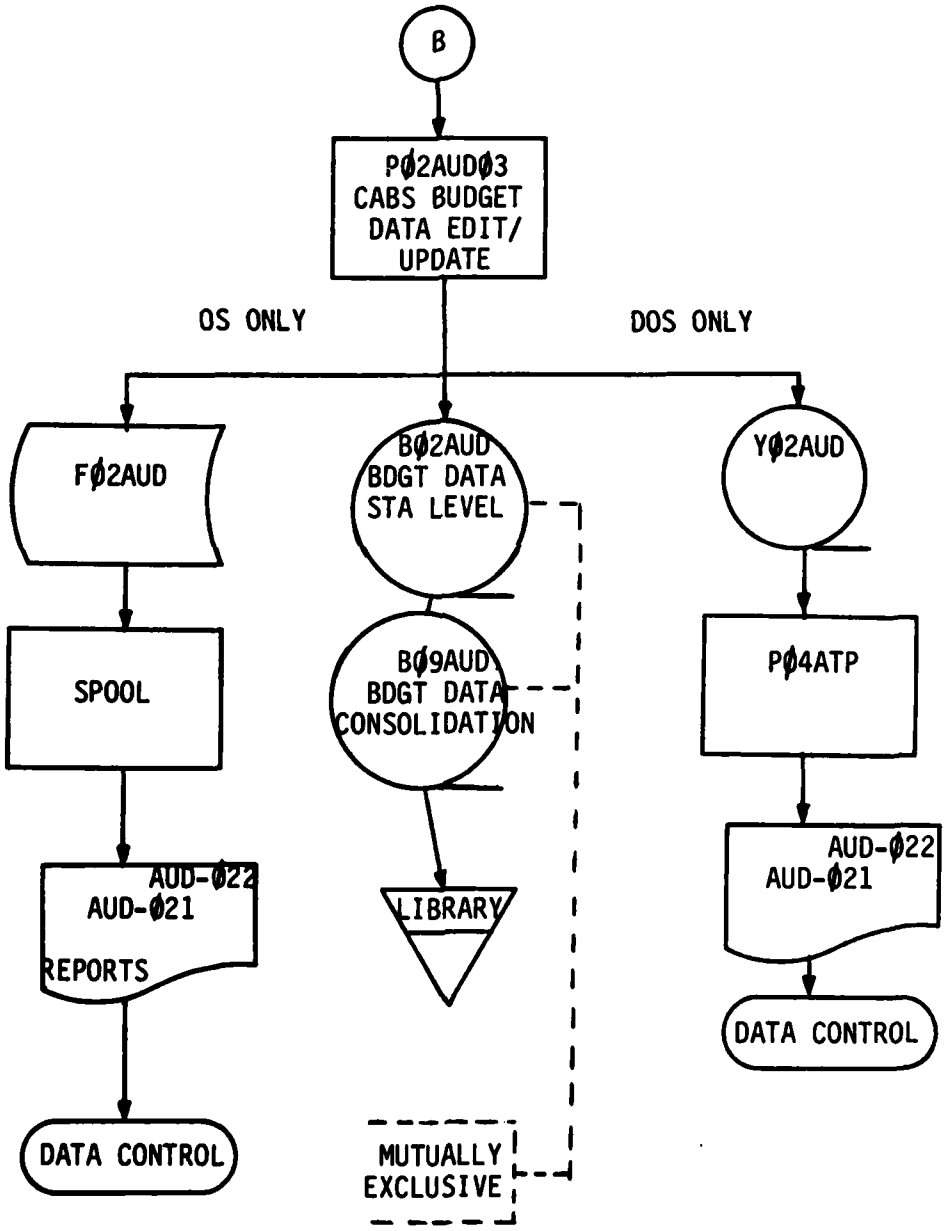

DA FORM 1 NOV 78 4735

Figure 3.5-01

OUTPUT REPORTS

For use of this form, see TB 18-111; the proponent agency is CSA.

1. RUN ID	2. DATE
AUDTØ2	811201

3. FILE ID	4. MEDIA	5. PCN/RCS	6. SECLAS/ PRIV	7. PRINTER					8. VOLUME	9. REPORT TITLE	10. DISPOSITION
				PAPER a.	NO. OF CYS b.	TAPE c.	PRINT POS d.	LINE UP e.			
EØ2AUD	CARD		U/N							BUDGET DATA TRANSACTIONS	PGM/BDGT DIVISION
FØ2AUD	DISK	AUD-Ø21	U/N							CABS BUDGET DATA EDIT ERROR LISTING	PGM/BDGT DIVISION
FØ2AUD	DISK	AUD-Ø22	U/N							CABS BUDGET DATA UPDATE REGISTER	PGM/BDGT DIVISION

11. REMARKS

DA FORM 1 NOV 78 4748

Figure 3.5-01

RECOVERY INSTRUCTIONS For use of this form, see TB 18-111; the proponent agency is CSA.	1. DATE 811201
2. RUN ID AUDTØ2	3. RUN TITLE CABS BUDGET DATA EDIT/UPDATE
4. ID CODE	5. RECOVERY INSTRUCTIONS
IEBGENØ2	Restart the run.
PØ2AUDØ3	Restart the run.
6. REMARKS	

DA FORM 1 NOV 78 4751

Figure 3.5-01

(Blank Page)

3.6 Run Description AUDTØ3. Reference Figure 3.6-01

INDEX FOR FIGURE 3.6-01

	NAME	PAGE NO.
3.6.1	Control Inputs	
3.6.1.1	Control Cards	3-52 thru 3-53
3.6.1.2	Control Input Statements	NA
3.6.1.2.1	Job Control Statements (PROC)	3-54 thru 3-62
3.6.1.2.2	Job Control Statements (RETRIEVAL)	3-63
3.6.2	Management Information	
3.6.2.1	Run Setup-Console Operating Information	3-64 thru 3-65
3.6.2.2	Run Messages and Responses	3-66
3.6.2.3	Logic Chart	3-67 thru 3-70
3.6.3	Input-Output Files	See DA Form 4744 for the I/O File Information
3.6.4	Output Reports	3-71
3.6.5	Reproduced Output Reports	
3.6.5.1	Reproduced Output Reports	NA
3.6.5.2	PCM Processing Instructions	NA
3.6.6	Restart/Recovery Procedures	
3.6.6.1	Recovery Instructions	3-72

CONTROL CARD PREPARATION For use of this form, see TB 18-111; the proponent agency is CSA.	1. DATE 811201
2. RUN ID AUDTØ3	3. RUN TITLE CABS TRIAL TAB AND/OR BALANCE REPORT
4. CONTROL CARD ID PØ3AUD-CNTL	5. CONTROL CARD TITLE PØ3AUD-CONTROL-CARD
6. CONTROL CARD PURPOSE AND REMARKS To provide program parameter options.	
7. USER INFORMATION, IF REQUIRED NOTE: "TAB" option is for OS version only; it has no effect for DOS. If this option is desired on DOS, it must be coordinated with DPI analyst to omit Job Steps PØ4AUDØ3 and PØ5AUDØ4.	

8. CONTROL CARD INSTRUCTIONS

FIELD a.	POSITION b.	PREPARATION INSTRUCTIONS c.	RESPONSIBLE AGENCY d.
CNTL-ID	1 11	Constant "PØ3AUD-CNTL"	
	12	Blank	
TAB-TYPE DATA	13 16	"OMAA" to input budget data for OMA only for Trial Tab. "OMAR" to input budget data for OMAR only for Trial Tab. Blank to include all budget data (OMA and OMAR) on Trial Tab.	Functional user
	17	Blank	
TYPE-REPORT	18 2Ø	"TAB" to produce Trial Tab only (see note Item 7). "BAL" to produce Balance Report only. Blank to produce both.	Functional user
	21	Blank	
TAB-SCOPE	22 27	"UPDATE" to limit Trial Tab to those station codes that were affected by latest budget data update. Blank to include all station codes on the budget data file.	Functional user
	28 8Ø	Blank	

DA FORM 1 NOV 78 4743

Figure 3.6-01

CONTROL CARD PREPARATION
For use of this form, see TB 18-111; the proponent agency is CSA.

1. DATE: 811201

2. RUN ID: AUDTØ3

3. RUN TITLE: CABS TRIAL TAB AND/OR BALANCE REPORT

4. CONTROL CARD ID: PØ4AUD-CNTL

5. CONTROL CARD TITLE: PØ4AUD-CONTROL-CARD

6. CONTROL CARD PURPOSE AND REMARKS

To provide program parameter options.

7. USER INFORMATION, IF REQUIRED

8. CONTROL CARD INSTRUCTIONS

FIELD a.	POSITION b.	PREPARATION INSTRUCTIONS c.	RESPONSIBLE AGENCY d.
CNTL-ID	1 11	Constant "PØ4AUD-CNTL"	
	12	Blank	
BAL-TYPE-DATA	13 16	"OMAA" to input budget data for OMA only for Balance Report. "OMAR" to input budget data for OMAR only for Balance Report. Blank to include all budget data (OMA and OMAR) on Balance Report.	Functional user
	17	Blank	
BAL-SCOPE	18 23	"UPDATE" to limit Balance Report to those station codes that were affected by latest budget data update. Blank to include all station codes on the budget data file.	Functional user
	24	Blank	
QTR-SEL	25 28	Quarter select (Quarter Codes 1 thru 4, or blanks can be entered in any sequence); all blank will select all Quarters.	Functional user
	29 8Ø	Blank	

DA FORM 1 NOV 78 4743

Figure 3.6-01

JOB CONTROL STATEMENTS (PROC) - OS

```
IDTØ3S1 PROC CYC=COB

 ********************************************************************
 * THIS PROC PRODUCES THE CABS TRIAL TAB AND/OR BALANCE REPORT *
 ********************************************************************

:BGENØ1 EXEC PGM=IEBGENER
'SPRINT DD SYSOUT=A
'SUT1   DD DSN=AUD.CABS.&CYC..AØAAUD(Ø),DISP=OLD
'SUT2   DD DSN=AUD.CABS.AØAAUD,UNIT=SYSDA,SPACE=(CYL,3),
       DISP=(NEW,PASS),DCB=(RECFM=BFS,BLKSIZE=12ØØ,LRECL=12Ø)
'SIN    DD DUMMY
)3AUDØ2 EXEC PGM=PØ3AUD
'SIN    DD DUMMY
\ØAAUD  DD DSN=AUD.CABS.AØAAUD,DISP=(OLD,PASS)
:Ø2AUD  DD DSN=AUD.CABS.&CYC..BØ2AUD(Ø),DISP=(OLD,PASS)
\Ø3AUD  DD DSN=AUD.CABS.AØ3AUD,UNIT=TAPE9,LABEL=RETPD=7,
       DCB=(RECFM=BFS,BLKSIZE=133Ø,LRECL=133),
       DISP=(NEW,KEEP,DELETE)
:Ø3AUD  DD UNIT=SYSDA,SPACE=(CYL,2),
       DCB=(RECFM=BFS,BLKSIZE=8ØØ,LRECL=8Ø)
:Ø3AUD  DD UNIT=SYSDA,SPACE=(CYL,2),
       DCB=(RECFM=BFS,BLKSIZE=8ØØ,LRECL=8Ø)
'SOUT   DD SYSOUT=A
'SUDUMP DD SYSOUT=A
)4AUDØ3 EXEC PGM=PØ4AUD,COND=(1111,EQ),TIME=24Ø
'SIN    DD DUMMY
\ØAAUD  DD DSN=AUD.CABS.AØAAUD,DISP=(OLD,PASS)
:Ø2AUD  DD DSN=*.PØ3AUDØ2.IBØ2AUD,DISP=OLD
\Ø4AUD  DD DSN=AUD.CABS.AØ4AUD,UNIT=SYSDA,SPACE=(CYL,(6Ø,2)),
       DISP=(,PASS,DELETE),DCB=(RECFM=BFS,BLKSIZE=148Ø,LRECL=148)
:Ø4AUD  DD UNIT=SYSDA,SPACE=(CYL,2),
       DCB=(RECFM=BFS,BLKSIZE=8ØØ,LRECL=8Ø)
)RTLIB  DD DSN=SYS1.SORTLIB,DISP=SHR
)RTWKØ1 DD UNIT=SYSDA,SPACE=(CYL,2Ø,,CONTIG)
)RTWKØ2 DD UNIT=SYSDA,SPACE=(CYL,2Ø,,CONTIG)
)RTWKØ3 DD UNIT=SYSDA,SPACE=(CYL,2Ø,,CONTIG)
)RTWKØ4 DD UNIT=SYSDA,SPACE=(CYL,2Ø,,CONTIG)
'SOUT   DD SYSOUT=A
'SUDUMP DD SYSOUT=A
)5AUDØ4 EXEC PGM=PØ5AUD,COND=(1111,EQ)
\ØAAUD  DD DSN=AUD.CABS.AOAAUD,DISP=(OLD,DELETE)
\Ø4AUD  DD DSN=AUD.CABS.AØ4AUD,DISP=(OLD,DELETE)
\Ø5AUD  DD SYSOUT=A,DCB=BLKSIZE=133
:Ø5AUD  DD UNIT=SYSDA,SPACE=(CYL,2),
       DCB=(RECFM=BFS,BLKSIZE=8ØØ,LRECL=8Ø)
'SOUT   DD SYSOUT=A
'SUDUMP  DD SYSOUT=A
```

Figure 3.6-01

JOB CONTROL STATEMENT CARD DECK LISTING - DOS

```
// JOB AUDTØ3  C1DØR     CABS TRIAL TAB AND BALA          CYC=AOC
*  JOB STEP PØ3AUDØ1
// TLBL UIN,'AOC.AØAAUD'
// DLBL UOUT,'AAAAUD',Ø,SD
// EXTENT SYSØ21,WRK1&P,1,Ø,2Ø,Ø6Ø,B=1
// EXEC TDYNASN
// ASSGN SYSØØ4,DUMMY
/*
// EXEC TPDK
// UTD TC,FF,A=(12Ø,12ØØ),B=(12Ø,12ØØ),IU,OY,R1,E=(2314)
// END
*  JOB STEP PØ3AUDØ2
// TLBL IBØ2AUD,'AOC.BØ2AUD'       CABS BUDGET DATA AOC
// DLBL IAØAAUD,'AAAAUD'
// EXTENT SYSØ21,WRK1&P,1,Ø,2Ø,1,B=1
// DLBL OAØ3AUD,'AØ3AUD'       PRINTFILE
// EXTENT SYSØ21,WRK1&P,1,Ø,2Ø,1,B=1
// DLBL WCØ3AUD,'CØ3AUD'
// EXTENT SYSØ21,WRK1&P,1,Ø,2Ø,Ø4Ø,B=1
// DLBL WEØ3AUD,'EØ3AUD'
// EXTENT SYSØ21,WRK1&P,1,Ø,2Ø,Ø4Ø,B=1
// TLBL OYØ3AUD,'YØ3AUD'       SPOOL OUTPUT
// EXEC TDYNASN
OPEN OYØ3AUD,SYSØ13,OUTPUT
/*
// EXEC PØ3AUD
PØ3AUD-CNTL (User Control Card Options)
/*       PLACE PØ3AUD CONTROL CARD BEFORE THIS CARD
/*
// EXEC TDYNASN
CLOSE OYØ3AUD,SYSØ13,OUTPUT
/*
```

Figure 3.6-01

JOB CONTROL STATEMENT CARD DECK LISTING - DOS (CONTINUED)

```
*  JOB STEP PØ4AUDØ3
// ASSGN SYSØØ1,X'DK2'
// DLBL IAØAAUD,'AAAAUD'
// EXTENT SYSØ21,WRK1&P,1,Ø,2Ø,1,B=1
// TLBL IBØ2AUD,'AOC.BØ2AUD'          CABS BUDGET DATA AOC
// DLBL WAØ4AUD,'AØ4AUD'
// EXTENT SYSØ21,WRK1&P,1,Ø,2Ø,6ØØ,B=1
// DLBL WBØ4AUD,'BØ4AUD'
// EXTENT SYSØ21,WRK1&P,1,Ø,2Ø,Ø4Ø,B=1
// DLBL SORTWK1,'JØ4AUD'
// EXTENT SYSØØ1,WRK2&P,1,Ø,2Ø,1ØØ,B=1
// EXEC PØ4AUD
PØ4AUD-CNTL
/*       PLACE PØ4AUD CONTROL CARD BEFORE THIS CARD
*  JOB STEP PØ5AUDØ4
// DLBL IAØAAUD,'AAAAUD'
// EXTENT SYSØ21,WRK1&P,1,Ø,2Ø,1,B=1
// DLBL WAØ4AUD,'AØ4AUD,D'
// EXTENT SYSØ21,WRK1&P,1,Ø,2Ø,1,B=1
// DLBL OAØ5AUD,'AØ5AUD'       PRINTFILE
// EXTENT SYSØ21,WRK1&P,1,Ø,2Ø,1,B=1
// DLBL WBØ5AUD,'BØ5AUD'
// EXTENT SYSØ21,WRK1&P,1,Ø,2Ø,Ø4Ø,B=1
// EXEC PØ5AUD
CLOSE SYSØ13
/*
// DLBL IAØAAUD,'AAAAUD'
// EXTENT SYSØ21,WRK1&P,1,Ø,2Ø,1,B=1
// DLBL OAØ3AUD,'AØ3AUD'       PRINTFILE
// EXTENT SYSØ21,WRK1&P,1,Ø,2Ø,1,B=1
// DLBL WCØ3AUD,'CØ3AUD'
// EXTENT SYSØ21,WRK1&P,1,Ø,2Ø,1,B=1
// DLBL WEØ3AUD,'EØ3AUD'
// EXTENT SYSØ21,WRK1&P,1,Ø,2Ø,1,B=1
// DLBL WBØ4AUD,'BØ4AUD'
// EXTENT SYSØ21,WRK1&P,1,Ø,2Ø,1,B=1
// DLBL OAØ5AUD,'AØ5AUD'
// EXTENT SYSØ21,WRK1&P,1,Ø,2Ø,1,B=1
// DLBL WBØ5AUD,'BØ5AUD'
// EXTENT SYSØ21,WRK1&P,1,Ø,2Ø,1,B=1
// EXEC ADASD
/*
/&
```

Figure 3.6-01

JOB CONTROL STATEMENT CARD DECK LISTING - DOS (CONTINUED)

```
// JOB AUDTØ3  C1DØR     CABS TRIAL TAB AND BALA          CYC=COB
*  JOB STEP PØ3AUDØ1
// TLBL UIN,'COB.AØAAUD'
// DLBL UOUT,'AAAAUD',Ø,SD
// EXTENT SYSØ21,WRK1&P,1,Ø,2Ø,Ø6Ø,B=1
// EXEC TDYNASN
// ASSGN SYSØØ4,DUMMY
/*
// EXEC TPDK
// UTD TC,FF,A=(12Ø,12ØØ),B=(12Ø,12ØØ),IU,OY,R1,E=(2314)
// END
*  JOB STEP PØ3AUDØ2
// TLBL IBØ2AUD,'COB.BØ2AUD'       CABS BUDGET DATA COB
// DLBL IAØAAUD,'AAAAUD'
// EXTENT SYSØ21,WRK1&P,1,Ø,2Ø,1,B=1
// DLBL OAØ3AUD,'AØ3AUD'       PRINTFILE
// EXTENT SYSØ21,WRK1&P,1,Ø,2Ø,1,B=1
// DLBL WCØ3AUD,'CØ3AUD'
// EXTENT SYSØ21,WRK1&P,1,Ø,2Ø,Ø4Ø,B=1
// DLBL WEØ3AUD,'EØ3AUD'
// EXTENT SYSØ21,WRK1&P,1,Ø,2Ø,Ø4Ø,B=1
// TLBL OYØ3AUD,'YØ3AUD'       SPOOL OUTPUT
// EXEC TDYNASN
OPEN OYØ3AUD,SYSØ13,OUTPUT
/*
// EXEC PØ3AUD
PØ3AUD-CNTL (User Control Card Options)
/*       PLACE PØ3AUD CONTROL CARD BEFORE THIS CARD
/*
// EXEC TDYNASN
CLOSE OYØ3AUD,SYSØ13,OUTPUT
/*
```

Figure 3.6-01

JOB CONTROL STATEMENT CARD DECK LISTING - DOS (CONTINUED)

```
*  JOB STEP PØ4AUDØ3
// ASSGN SYSØØ1,X'DK2'
// DLBL IAØAAUD,'AAAAUD'
// EXTENT SYSØ21,WRK1&P,1,Ø,2Ø,1,B=1
// TLBL IBØ2AUD,'COB.BØ2AUD'          CABS BUDGET DATA COB
// DLBL WAØ4AUD,'AØ4AUD'
// EXTENT SYSØ21,WRK1&P,1,Ø,2Ø,6ØØ,B=1
// DLBL WBØ4AUD,'BØ4AUD'
// EXTENT SYSØ21,WRK1&P,1,Ø,2Ø,Ø4Ø,B=1
// DLBL SORTWK1,'JØ4AUD'
// EXTENT SYSØØ1,WRK2&P,1,Ø,2Ø,1ØØ,B=1
// EXEC PØ4AUD
PØ4AUD-CNTL
/*       PLACE PØ4AUD CONTROL CARD BEFORE THIS CARD
*  JOB STEP PØ5AUDØ4
// DLBL IAØAAUD,'AAAAUD'
// EXTENT SYSØ21,WRK1&P,1,Ø,2Ø,1,B=1
// DLBL WAØ4AUD,'AØ4AUD,D'
// EXTENT SYSØ21,WRK1&P,1,Ø,2Ø,1,B=1
// DLBL OAØ5AUD,'AØ5AUD'       PRINTFILE
// EXTENT SYSØ21,WRK1&P,1,Ø,2Ø,1,B=1
// DLBL WBØ5AUD,'BØ5AUD'
// EXTENT SYSØ21,WRK1&P,1,Ø,2Ø,Ø4Ø,B=1
// EXEC PØ5AUD
CLOSE SYSØ13
/*
// DLBL IAØAAUD,'AAAAUD'
// EXTENT SYSØ21,WRK1&P,1,Ø,2Ø,1,B=1
// DLBL OAØ3AUD,'AØ3AUD'       PRINTFILE
// EXTENT SYSØ21,WRK1&P,1,Ø,2Ø,1,B=1
// DLBL WCØ3AUD,'CØ3AUD'
// EXTENT SYSØ21,WRK1&P,1,Ø,2Ø,1,B=1
// DLBL WEØ3AUD,'EØ3AUD'
// EXTENT SYSØ21,WRK1&P,1,Ø,2Ø,1,B=1
// DLBL WBØ4AUD,'BØ4AUD'
// EXTENT SYSØ21,WRK1&P,1,Ø,2Ø,1,B=1
// DLBL OAØ5AUD,'AØ5AUD'
// EXTENT SYSØ21,WRK1&P,1,Ø,2Ø,1,B=1
// DLBL WBØ5AUD,'BØ5AUD'
// EXTENT SYSØ21,WRK1&P,1,Ø,2Ø,1,B=1
// EXEC ADASD
/*
/&
```

Figure 3.6-01

JOB CONTROL STATEMENT CARD DECK LISTING - DOS (CONTROL)

```
// JOB AUDTØ3  C1DØR     CABS TRIAL TAB AND BALA            CYC=OBL
*  JOB STEP PØ3AUDØ1
// TLBL UIN,'OBL.AØAAUD'
// DLBL UOUT,'AAAAUD',Ø,SD
// EXTENT SYSØ21,WRK1&P,1,Ø,2Ø,Ø6Ø,B=1
// EXEC TDYNASN
// ASSGN SYSØØ4,DUMMY
/*
// EXEC TPDK
// UTD TC,FF,A=(12Ø,12ØØ),B=(12Ø,12ØØ),IU,OY,R1,E=(2314)
// END
*  JOB STEP PØ3AUDØ2
// TLBL IBØ2AUD,'OBL.BØ2AUD'       CABS BUDGET DATA OBL
// DLBL IAØAAUD,'AAAAUD'
// EXTENT SYSØ21,WRK1&P,1,Ø,2Ø,1,B=1
// DLBL OAØ3AUD,'AØ3AUD'       PRINTFILE
// EXTENT SYSØ21,WRK1&P,1,Ø,2Ø,1,B=1
// DLBL WCØ3AUD,'CØ3AUD'
// EXTENT SYSØ21,WRK1&P,1,Ø,2Ø,Ø4Ø,B=1
// DLBL WEØ3AUD,'EØ3AUD'
// EXTENT SYSØ21,WRK1&P,1,Ø,2Ø,Ø4Ø,B=1
// TLBL OYØ3AUD,'YØ3AUD'       SPOOL OUTPUT
// EXEC TDYNASN
OPEN OYØ3AUD,SYSØ13,OUTPUT
/*
// EXEC PØ3AUD
PØ3AUD-CNTL (User Control Card Options)
/*       PLACE PØ3AUD CONTROL CARD BEFORE THIS CARD
/*
// EXEC TDYNASN
CLOSE OYØ3AUD,SYSØ13,OUTPUT
/*
```

Figure 3.6-01

JOB CONTROL STATEMENT CARD DECK LISTING - DOS (CONTINUED)

```
*  JOB STEP PØ4AUDØ3
// ASSGN SYSØØ1,X'DK2'
// DLBL IAØAAUD,'AAAAUD'
// EXTENT SYSØ21,WRK1&P,1,Ø,2Ø,1,B=1
// TLBL IBØ2AUD,'OBL.BØ2AUD'          CABS BUDGET DATA OBL
// DLBL WAØ4AUD,'AØ4AUD'
// EXTENT SYSØ21,WRK1&P,1,Ø,2Ø,6ØØ,B=1
// DLBL WBØ4AUD,'BØ4AUD'
// EXTENT SYSØ21,WRK1&P,1,Ø,2Ø,Ø4Ø,B=1
// DLBL SORTWK1,'JØ4AUD'
// EXTENT SYSØØ1,WRK2&P,1,Ø,2Ø,1ØØ,B=1
// EXEC PØ4AUD
PØ4AUD-CNTL
/*       PLACE PØ4AUD CONTROL CARD BEFORE THIS CARD
*  JOB STEP PØ5AUDØ4
// DLBL IAØAAUD,'AAAAUD'
// EXTENT SYSØ21,WRK1&P,1,Ø,2Ø,1,B=1
// DLBL WAØ4AUD,'AØ4AUD,D'
// EXTENT SYSØ21,WRK1&P,1,Ø,2Ø,1,B=1
// DLBL OAØ5AUD,'AØ5AUD'      PRINTFILE
// EXTENT SYSØ21,WRK1&P,1,Ø,2Ø,1,B=1
// DLBL WBØ5AUD,'BØ5AUD'
// EXTENT SYSØ21,WRK1&P,1,Ø,2Ø,Ø4Ø,B=1
// EXEC PØ5AUD
CLOSE SYSØ13
/*
// DLBL IAØAAUD,'AAAAUD'
// EXTENT SYSØ21,WRK1&P,1,Ø,2Ø,1,B=1
// DLBL OAØ3AUD,'AØ3AUD'       PRINTFILE
// EXTENT SYSØ21,WRK1&P,1,Ø,2Ø,1,B=1
// DLBL WCØ3AUD,'CØ3AUD'
// EXTENT SYSØ21,WRK1&P,1,Ø,2Ø,1,B=1
// DLBL WEØ3AUD,'EØ3AUD'
// EXTENT SYSØ21,WRK1&P,1,Ø,2Ø,1,B=1
// DLBL WBØ4AUD,'BØ4AUD'
// EXTENT SYSØ21,WRK1&P,1,Ø,2Ø,1,B=1
// DLBL OAØ5AUD,'AØ5AUD'
// EXTENT SYSØ21,WRK1&P,1,Ø,2Ø,1,B=1
// DLBL WBØ5AUD,'BØ5AUD'
// EXTENT SYSØ21,WRK1&P,1,Ø,2Ø,1,B=1
// EXEC ADASD
/*
/&
```

Figure 3.6-01

JOB CONTROL STATEMENT CARD DECK LISTING - DOS (CONTINUED)

```
// JOB AUDTØ3  C1DØR     CABS TRIAL TAB AND BALA          CYC=SOR
*  JOB STEP PØ3AUDØ1
// TLBL UIN,'SOR.AØAAUD'
// DLBL UOUT,'AAAAUD',Ø,SD
// EXTENT SYSØ21,WRK1&P,1,Ø,2Ø,Ø6Ø,B=1
// EXEC TDYNASN
// ASSGN SYSØØ4,DUMMY
/*
// EXEC TPDK
// UTD TC,FF,A=(12Ø,12ØØ),B=(12Ø,12ØØ),IU,OY,R1,E=(2314)
// END
*  JOB STEP PØ3AUDØ2
// TLBL IBØ2AUD,'SOR.BØ2AUD'       CABS BUDGET DATA SOR
// DLBL IAØAAUD,'AAAAUD'
// EXTENT SYSØ21,WRK1&P,1,Ø,2Ø,1,B=1
// DLBL OAØ3AUD,'AØ3AUD'       PRINTFILE
// EXTENT SYSØ21,WRK1&P,1,Ø,2Ø,1,B=1
// DLBL WCØ3AUD,'CØ3AUD'
// EXTENT SYSØ21,WRK1&P,1,Ø,2Ø,Ø4Ø,B=1
// DLBL WEØ3AUD,'EØ3AUD'
// EXTENT SYSØ21,WRK1&P,1,Ø,2Ø,Ø4Ø,B=1
// TLBL OYØ3AUD,'YØ3AUD'       SPOOL OUTPUT
// EXEC TDYNASN
OPEN OYØ3AUD,SYSØ13,OUTPUT
/*
// EXEC PØ3AUD
PØ3AUD-CNTL (User Control Card Options)
/*       PLACE PØ3AUD CONTROL CARD BEFORE THIS CARD
/*
// EXEC TDYNASN
CLOSE OYØ3AUD,SYSØ13,OUTPUT
/*
```

Figure 3.6-01

JOB CONTROL STATEMENT CARD DECK LISTING - DOS (CONTINUED)

```
*  JOB STEP PØ4AUDØ3
// ASSGN SYSØØ1,X'DK2'
// DLBL IAØAAUD,'AAAAUD'
// EXTENT SYSØ21,WRK1&P,1,Ø,2Ø,1,B=1
// TLBL IBØ2AUD,'SOR.BØ2AUD'          CABS BUDGET DATA SOR
// DLBL WAØ4AUD,'AØ4AUD'
// EXTENT SYSØ21,WRK1&P,1,Ø,2Ø,6ØØ,B=1
// DLBL WBØ4AUD,'BØ4AUD'
// EXTENT SYSØ21,WRK1&P,1,Ø,2Ø,Ø4Ø,B=1
// DLBL SORTWK1,'JØ4AUD'
// EXTENT SYSØØ1,WRK2&P,1,Ø,2Ø,1ØØ,B=1
// EXEC PØ4AUD
PØ4AUD-CNTL
/*       PLACE PØ4AUD CONTROL CARD BEFORE THIS CARD
*  JOB STEP PØ5AUDØ4
// DLBL IAØAAUD,'AAAAUD'
// EXTENT SYSØ21,WRK1&P,1,Ø,2Ø,1,B=1
// DLBL WAØ4AUD,'AØ4AUD,D'
// EXTENT SYSØ21,WRK1&P,1,Ø,2Ø,1,B=1
// DLBL OAØ5AUD,'AØ5AUD'      PRINTFILE
// EXTENT SYSØ21,WRK1&P,1,Ø,2Ø,1,B=1
// DLBL WBØ5AUD,'BØ5AUD'
// EXTENT SYSØ21,WRK1&P,1,Ø,2Ø,Ø4Ø,B=1
// EXEC PØ5AUD
CLOSE SYSØ13
/*
// DLBL IAØAAUD,'AAAAUD'
// EXTENT SYSØ21,WRK1&P,1,Ø,2Ø,1,B=1
// DLBL OAØ3AUD,'AØ3AUD'       PRINTFILE
// EXTENT SYSØ21,WRK1&P,1,Ø,2Ø,1,B=1
// DLBL WCØ3AUD,'CØ3AUD'
// EXTENT SYSØ21,WRK1&P,1,Ø,2Ø,1,B=1
// DLBL WEØ3AUD,'EØ3AUD'
// EXTENT SYSØ21,WRK1&P,1,Ø,2Ø,1,B=1
// DLBL WBØ4AUD,'BØ4AUD'
// EXTENT SYSØ21,WRK1&P,1,Ø,2Ø,1,B=1
// DLBL OAØ5AUD,'AØ5AUD'
// EXTENT SYSØ21,WRK1&P,1,Ø,2Ø,1,B=1
// DLBL WBØ5AUD,'BØ5AUD'
// EXTENT SYSØ21,WRK1&P,1,Ø,2Ø,1,B=1
// EXEC ADASD
/*
/&
```

Figure 3.6-01

JOB CONTROL STATEMENT (RETRIEVAL) - OS

```
RUN ID:    AUDTØ3
RUN NAME:  CABS TRIAL TAB AND/OR BALANCE REPORT

//AUDTØ3   JOB (accounting information)
//AUDTØ3Ø1 EXEC AUDTØ3S1,CYC=XXX (see note 1)
//PØ3AUDØ2.SYSIN DD *
PØ3AUD-CNTL                    (user control card options)
/*
//PØ3AUDØ2.IBØ2AUD DD DSN=AUD.CABS.&CYC..BØ9AUD(Ø) *omit if station data run*
//PØ4AUDØ3.SYSIN   DD  *
PØ4AUD-CNTL                    (user control card options)
/*
//
```

NOTE 1: On EXEC CARD, subustitute for XXX the appropriate value to indicate type of run:

COB, AOC, OBL, SOR

Figure 3.6-01

RUN SETUP—CONSOLE OPERATING INFORMATION

For use of this form, see TB 18-111; the proponent agency is CSA.

1. DATE: 811201

2. RUN ID	3. RUN TITLE	4. SECLAS/PRIV
AUDTØ3	CABS TRIAL TAB AND/OR BALANCE REPORT	U/N

6. CORE REQ	7. POINT OF CONTACT	8. RUN AS OF	9. RUN DATE
74K			

10. CONT CD ID	11. DATE/TIME SCH IN	12. DATE/TIME SCH OUT
PØ3AUD-CNTL PØ4AUD-CNTL		

13. SYSTEM	14. RUN NO.	15. EST TIME	16. LANGUAGE
OS/DOS		15 MIN	COBOL

5. PERIPHERAL EQUIPMENT

TAPE DRIVES	2
DISK DRIVES	1
CARD READER	1
CARD PUNCH	Ø
PRINTER	1
OTHER	Ø

17. ID CODE	18. FILE ID	19. VOLUME NO.	20. I/O	21. MEDIA	22. UNIT	23. RETN	24. SECLAS/ PRIV	25. SOURCE	26. DISPOSITION	27. OPERATOR NOTES
IEBGENØ1	AØAAUD		I	TAPE			U/N	LIBRARY	LIBRARY	
	AØAAUD		O	DISK	SYSDA		U/N	SCRATCH	PØ3AUDØ2	
PØ3AUDØ2	AØAAUD		I	DISK	SYSDA		U/N	IEBGENØ1	PØ4AUDØ3	
	AØ3AUD	*	O	TAPE			U/N	SCRATCH	SPOOL/LIBRARY	
	YØ3AUD	**	O	TAPE			U/N	SCRATCH	SPOOL	
	BØ2AUD 1/		I	TAPE			U/N	LIBRARY	PØ4AUDØ3	
	BØ9AUD 1/		I	TAPE			U/N	LIBRARY	PØ4AUDØ3	

28. REMARKS

1/ MUTUALLY EXCLUSIVE
* OS only.
** DOS only.

DA FORM 1 NOV 78 4744

☆U.S. Government Printing Office. 1980—310-981/8838

Figure 3.6-01

RUN SETUP—CONSOLE OPERATING INFORMATION

For use of this form, see TB 18-111; the proponent agency is CSA.

1. DATE	
811201	

2. RUN ID	3. RUN TITLE	4. SECLAS/PRIV	5. PERIPHERAL EQUIPMENT
AUDTØ3	CABS TRIAL TAB AND/OR BALANCE REPORT (CONTINUED)		TAPE DRIVES DISK DRIVES CARD READER CARD PUNCH PRINTER OTHER

6. CORE REQ	7. POINT OF CONTACT	8. RUN AS OF	9. RUN DATE

10. CONT CD ID	11. DATE/TIME SCH IN	12. DATE/TIME SCH OUT

13. SYSTEM	14. RUN NO.	15. EST TIME	16. LANGUAGE

17. ID CODE	18. FILE ID	19. VOLUME NO.	20. I/O	21. MEDIA	22. UNIT	23. RETN	24. SECLAS/ PRIV	25. SOURCE	26. DISPOSITION	27. OPERATOR NOTES
PØ4AUDØ3	AØAAUD		I	DISK	SYSDA		U/N	PØ3AUDØ2	PØ5AUDØ4	
	AØ4AUD		O	DISK	SYSDA		U/N	SCRATCH	PØ5AUDØ4	
	BØ2AUD 1/		I	TAPE			U/N	PØ3AUDØ2	LIBRARY	
	BØ9AUD 1/		I	TAPE			U/N	PØ3AUDØ2	LIBRARY	
PØ5AUDØ4	AØAAUD		I	DISK	SYSDA		U/N	PØ4AUDØ3	SCRATCH	
	AØ4AUD		I	DISK	SYSDA		U/N	PØ4AUDØ3	SCRATCH	
	AØ5AUD		*O	DISK	SYSDA		U/N	SCRATCH	SPOOL	
			O	LIST	SYSPR		U/N	DISK	DATA CONTROL	

28. REMARKS

1/ Mutually exclusive
* OS only.

DA FORM 1 NOV 78 4744

☆U.S. Government Printing Office: 1980—310-981/8838

Figure 3.6-01

RUN MESSAGES AND RESPONSES For use of this form, see TB 18-111; the proponent agency is CSA.	1. DATE 811201
2. RUN ID AUDTØ3	3. RUN TITLE CABS TRIAL TAB AND/OR BALANCE REPORT

4. MESSAGE DISPLAYED	5. ACTION REQUIRED
CONSOLE MESSAGES:	
SAME AS SYSOUT/SYSLST	
SYSOUT/SYSLST MESSAGES:	
PØ3AUD Ø2 H NO TYPE E CTL RCD FOR THIS DATA RCD value	Notify the CABS analyst.
PØ3AUD Ø3 I STATIONS USED IN TRIAL TAB: value	Information only. The word VALUE represents the actual station codes used or the word "ALL".
PØ3AUD 11 H * *CTL CARD INVALID	Control card accepted from SYSIN is missing or invalid; correct and restart the run.
*TYPE E RCDS EXCEED LIMIT	Control file must be corrected Notify functional user.
PØ4AUD Ø1 H NO DATA RCDS	No records on the input budget data file meet selection criteria. The run is stopped. Notify the CABS analyst.
PØ4AUD Ø2 H TYPE F RCDS EXCEED LIMIT FOR RSN value	The type F control records exceed limit established in the users manual for the rsn specified as value. Update the control file. The run is stopped. Notify the CABS analyst.
PØ4AUD Ø4 I STATIONS USED IN BALANCE REPORT: value	Information only. The word VALUE represents the actual station codes used or the word "ALL".
PØ4AUD 11 H CONTROL CARD MISSING OR INVALID	Control card accepted from SYSIN is missing or invalid; correct and restart the run.

6. REMARKS

DA FORM 1 NOV 78 4745

Figure 3.6-01

LOGIC CHART
For use of this form, see TB 18-111; the proponent agency is CSA.

1. DATE: 811201

2. ID: AUDT03

3. TITLE: CABS TRIAL TAB AND/OR BALANCE REPORT

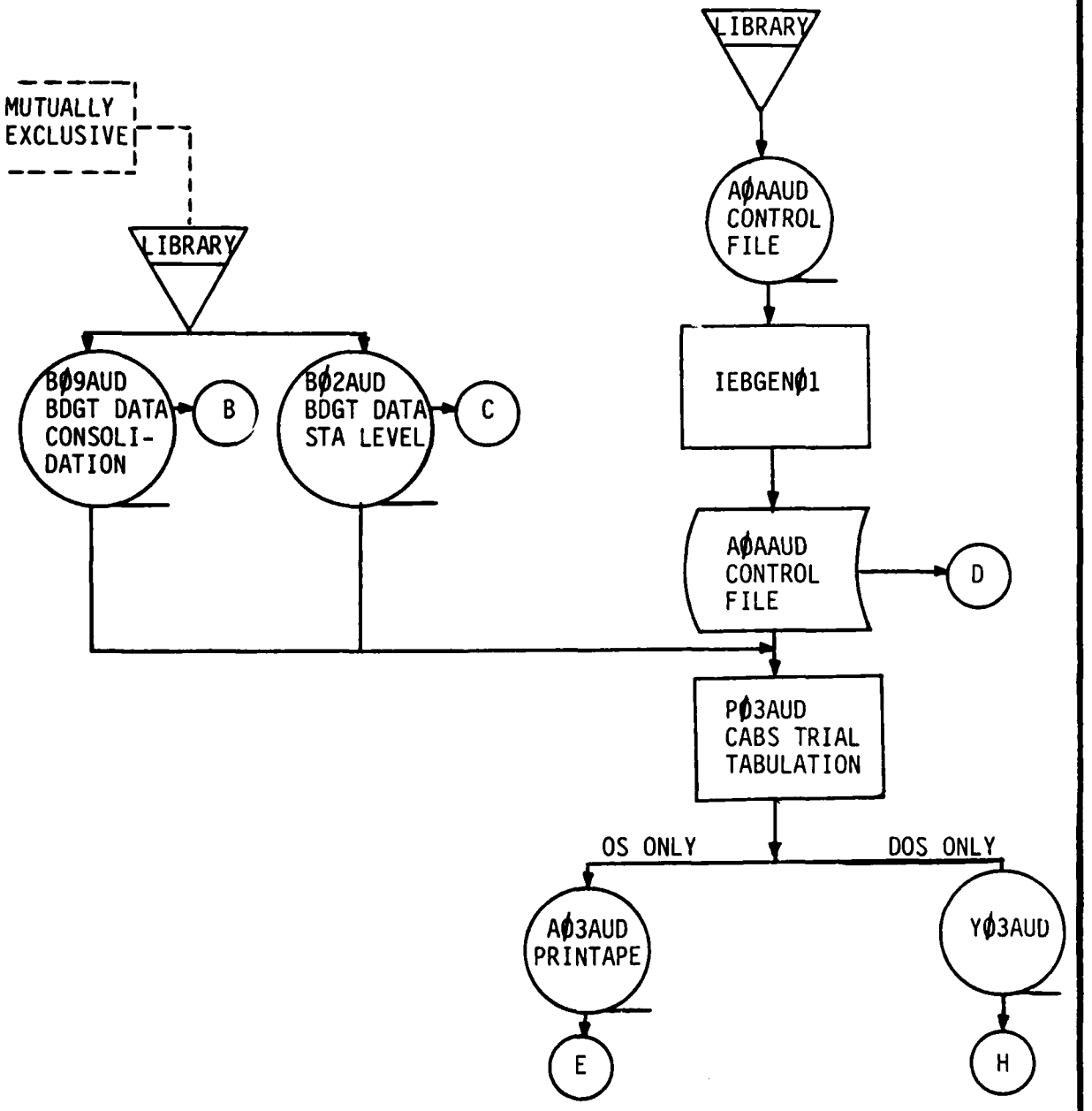

DA FORM 1 NOV 78 4735

Figure 3.6-01

LOGIC CHART

For use of this form, see TB 18-111; the proponent agency is CSA.

1. DATE 811201

3. TITLE

JDT03 CABS TRIAL TAB AND/OR BALANCE REPORT (CONTINUED)

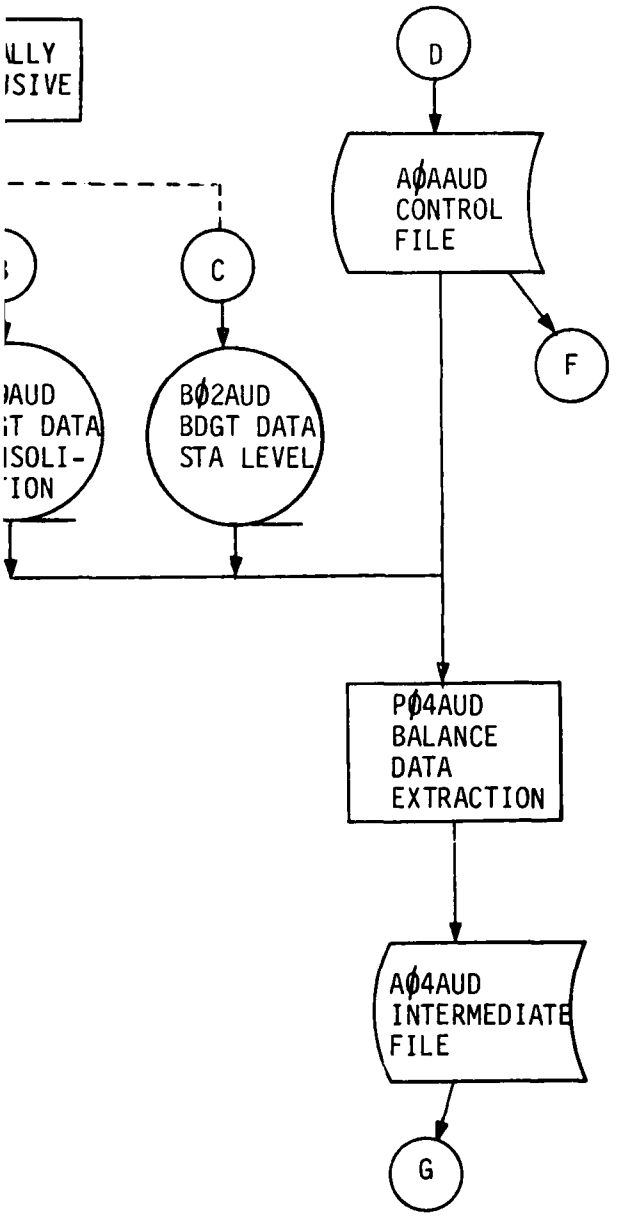

4735

Figure 3.6-01

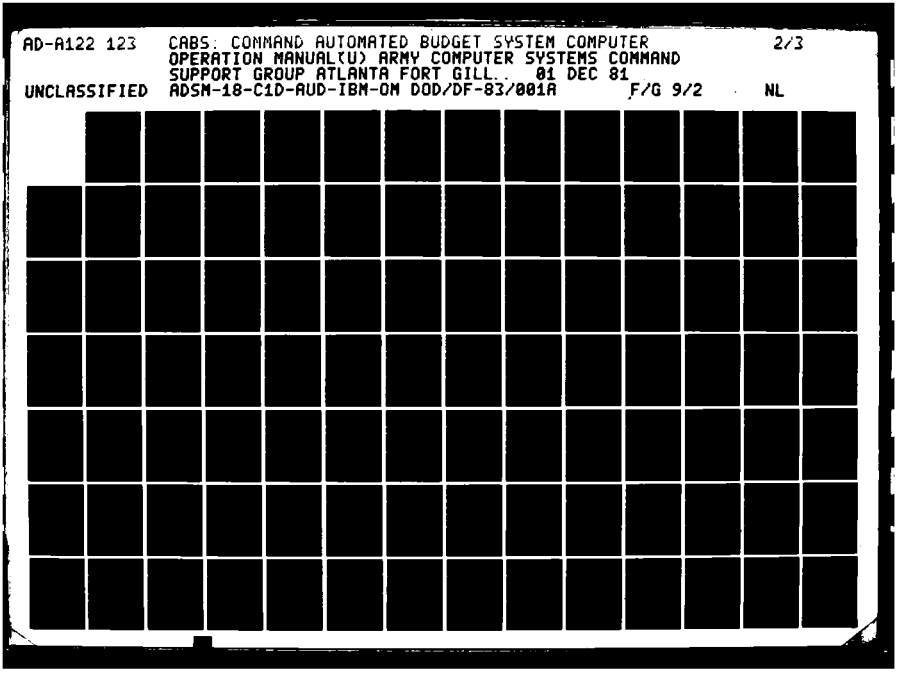

AD-A122 123 CABS: COMMAND AUTOMATED BUDGET SYSTEM COMPUTER 2/3
OPERATION MANUAL(U) ARMY COMPUTER SYSTEMS COMMAND
SUPPORT GROUP ATLANTA FORT GILL.. 01 DEC 81
UNCLASSIFIED ADSM-18-C1D-AUD-IBM-OM DOD/DF-83/001A F/G 9/2 NL

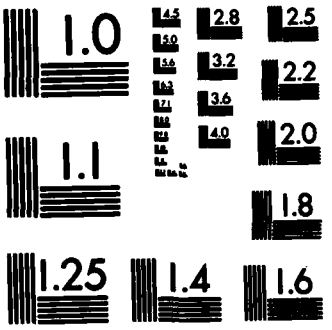

MICROCOPY RESOLUTION TEST CHART
NATIONAL BUREAU OF STANDARDS-1963-A

LOGIC CHART For use of this form, see TB 18-111; the proponent agency is CSA.	1. DATE 811201
2. ID AUD703	3. TITLE CABS TRIAL AND/OR BALANCE REPORT (CONTINUED)

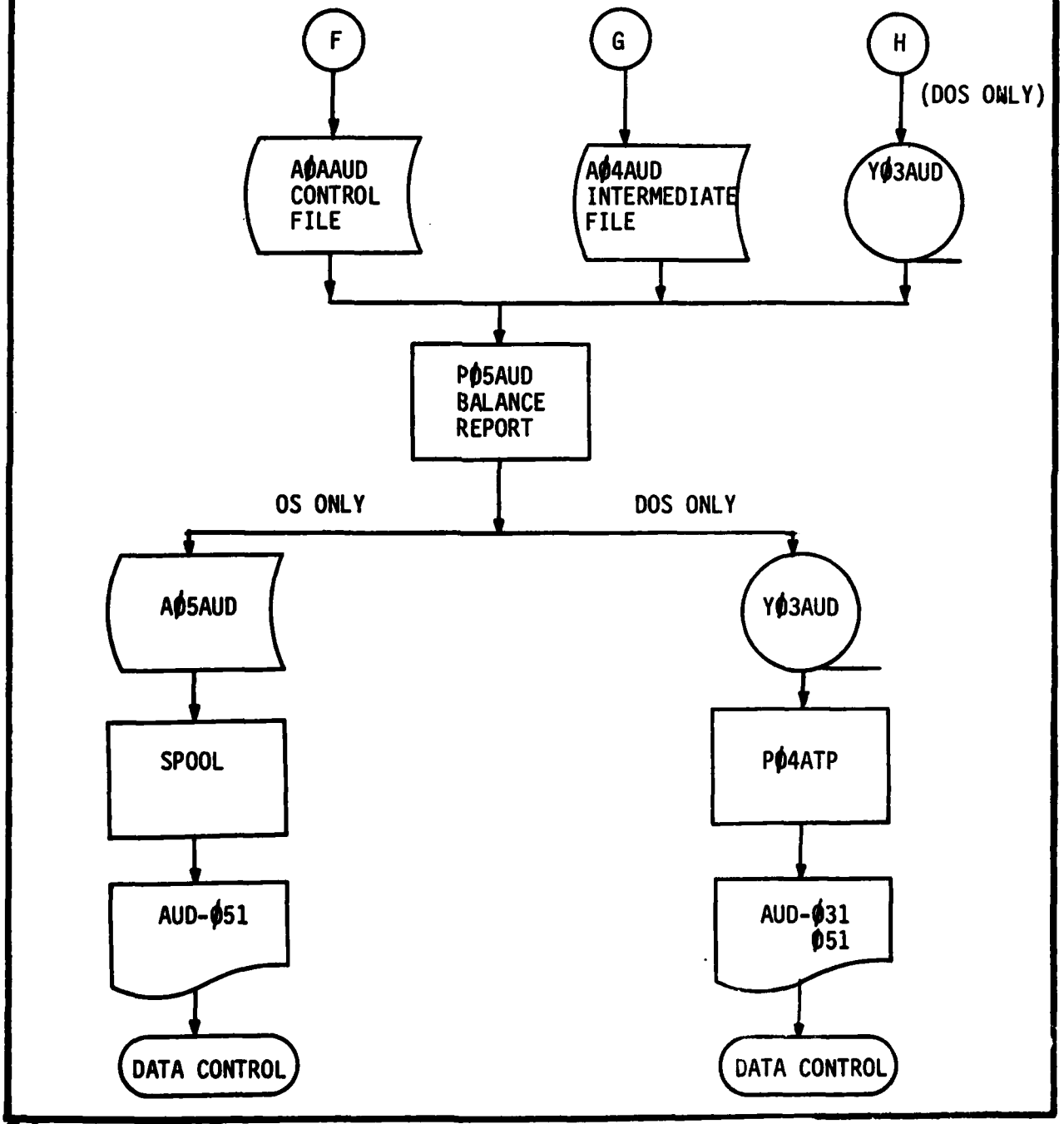

DA FORM 1 NOV 78 4735

Figure 3.6-01

LOGIC CHART For use of this form, see TB 18-111; the proponent agency is CSA.	1. DATE 811201
2. ID AUDT03	3. TITLE CABS TRIAL TAB AND/OR BALANCE REPORT (CONTINUED)

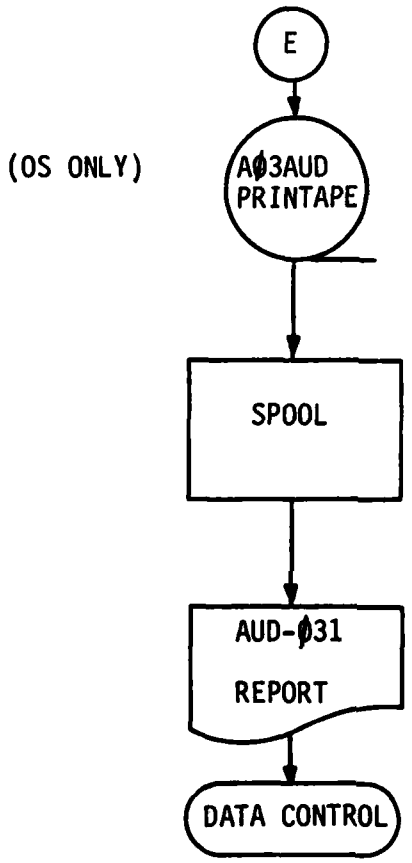

DA FORM 1 NOV 78 4735

Figure 3.6-01

OUTPUT REPORTS

For use of this form, see TB 18-111; the proponent agency is CSA.

1. RUN ID	2. DATE
AUDTØ3	811201

3. FILE ID	4. MEDIA	5. PCN/RCS	6. SECLAS/ PRIV	7. PRINTER					8. VOLUME	9. REPORT TITLE	10. DISPOSITION
				PAPER a.	NO. OF CYS b.	TAPE c.	PRINT POS d.	LINE UP e.			
AØ3AUD	TAPE	AUD-Ø31	U/N							CABS BUDGET DATA TRIAL TABULATION	PGM/BDGT DIVISION
AØ5AUD	DISK	AUD-Ø51	U/N							CABS BUDGET DATA BALANCE ERRORS AND INFORMATION	PGM/BDGT DIVISION

11. REMARKS

DA FORM 1 NOV 78 4748

Figure 3.6-01

RECOVERY INSTRUCTIONS For use of this form, see TB 18-111; the proponent agency is CSA.	1. DATE 811201
2. RUN ID AUDTØ3	3. RUN TITLE CABS TRIAL TAB AND/OR BALANCE REPORT

4. ID CODE	5. RECOVERY INSTRUCTIONS
IEBGENØ1	Restart with the original input and JCL setup.
PØ3AUDØ2	Restart with the original input and JCL setup.
PØ4AUDØ3	* Restart with the original input and JCL setup.
PØ5AUDØ4	* Restart with the original input and JCL setup. * NOTE: Coordinate with Functional Analyst. It may be permissible to change PØ3AUD-CNTL card to use the "BAL" (Balance Report Only) option and use the trial TAB produced prior to the ABEND.

6. REMARKS

DA FORM 1 NOV 78 4751

Figure 3.6-01

3.7 Run Description AUDTØ4. Reference Figure 3.7-01

INDEX FOR FIGURE 3.7-01

	NAME	PAGE NO.
3.7.1	Control Inputs	
3.7.1.1	Control Cards	3-74 thru 3-75
3.7.1.2	Control Input Statements	NA
3.7.1.2.1	Job Control Statements (PROC)	3-76 thru 3-84
3.7.1.2.2	Job Control Statements (RETRIEVAL)	3-85
3.7.2	Management Information	
3.7.2.1	Run Setup-Console Operating Information	3-86 thru 3-87
3.7.2.2	Run Messages and Responses	3-88 thru 3-90
3.7.2.3	Logic Chart	3-91 thru 3-95
3.7.3	Input-Output Files	See DA Form 4744 for the I/O File Information
3.7.4	Output Reports	3-96
3.7.5	Reproduced Output Reports	
3.7.5.1	Reproduced Output Reports	NA
3.7.5.2	PCM Processing Instructions	NA
3.7.6	Restart/Recovery Procedures	
3.7.6.1	Recovery Instructions	3-97

CONTROL CARD PREPARATION For use of this form, see TB18-111; the proponent agency is CSA.	1. DATE 811201
2. RUN ID AUDTØ4	3. RUN TITLE CABS STAFF WORKING REPORTS
4. CONTROL CARD ID PØ6AUD-CNTL	5. CONTROL CARD TITLE PØ6AUD-CONTROL-CARD
6. CONTROL CARD PURPOSE AND REMARKS TO PROVIDE PROGRAM PARAMETER OPTIONS.	
7. USER INFORMATION, IF REQUIRED	

8. CONTROL CARD INSTRUCTIONS

FIELD a.	POSITION b.	PREPARATION INSTRUCTIONS c.	RESPONSIBLE AGENCY d.
CNTL-ID	1 11	Constant "PØ6AUD-CNTL"	
	12	Blank	
BAL-TYPE-DATA	13 16	"OMAA" to input budget data for OMA only. "OMAR" to input budget data for OMAR only. "SPEC" to include only specified RSN's (per Control File). Blank to include all budget data (OMA and OMAR)	Functional user
	17	Blank	
TYPE-RUN	18 21	"INST" for installation level runs "SOR" for MACOM run of status of operating resources Blank for MACOM run other than SOR	Functional user
	22 8Ø	Blank	

DA FORM 1 NOV 78 4743

Figure 3.7-01

CONTROL CARD PREPARATION For use of this form, see TB 18-111; the proponent agency is CSA.	1. DATE 811201
2. RUN ID AUDTØ4	3. RUN TITLE CABS STAFF WORKING REPORTS
4. CONTROL CARD ID PØ8AUD-CNTL	5. CONTROL CARD TITLE PØ8AUD-CONTROL-CARD
6. CONTROL CARD PURPOSE AND REMARKS To provide program parameter options.	
7. USER INFORMATION, IF REQUIRED	

8. CONTROL CARD INSTRUCTIONS

FIELD a.	POSITION b.	PREPARATION INSTRUCTIONS c.	RESPONSIBLE AGENCY d.
CNTL-ID	1 11	Constant "PØ8AUD-CNTL"	
	12	Blank	
TYPE-DATA	13 16	"OMAA" to prepare reports for OMA. "OMAR" to prepare reports for OMAR. "SPEC" to prepare reports for specified report numbers (per Control File). "NO " to bypass preparation of Staff Work Reports in this run. Blank will run all data.	Functional user
RESTART RPT-NR	17 18	Blank for normal run. Numeric "Ø1" thru "99" to start output at the report number indicated.	Functional or DPI Analyst
	19	Blank	
PAGE-NR-CTL	2Ø	"Ø" if each report is to start as Page 1; otherwise page numbers will be a continuous sequence through all reports.	Functional user
	21 8Ø	Blank	

DA FORM 1 NOV 78 4743

Figure 3.7-01

JOB CONTROL STATEMENTS (PROC) - OS

```
//AUDTØ4S1 PROC CYC=COB
//*
//*  ************************************************************
//*  *   THIS PROC PRODUCES THE CABS STAFF WORKING REPORTS       *
//*  ************************************************************
//*
//IEBGENØ1 EXEC PGM=IEBGENER
//SYSPRINT DD SYSOUT=A
//SYSUT1   DD DSN=AUD.CABS.&CYC..AØAAUD(Ø),DISP=OLD
//SYSUT2   DD DSN=AUD.CABS.AØAAUD,UNIT=SYSDA,SPACE=(CYL,3),
//         DISP=(NEW,PASS),DCB=(RECFM=BFS,BLKSIZE=12ØØ,LRECL=12Ø)
//SYSIN    DD DUMMY
//PØ6AUDØ2 EXEC PGM=PØ6AUD
//SYSIN    DD  DUMMY,DCB=BLKSIZE=8Ø
//IAØAAUD  DD DSN=AUD.CABS.AØAAUD,DISP=(OLD,PASS)
//IBØ2AUD  DD DSN=AUD.CABS.&CYC..BØ2AUD(Ø),DISP=OLD
//WAØ6AUD  DD DSN=AUD.CABS.AØ6AUD,UNIT=SYSDA,SPACE=(CYL,(14Ø,1Ø),RLSE),
//         DISP=(,PASS,DELETE),DCB=(RECFM=BFS,BLKSIZE=3498,LRECL=1Ø6)
//WBØ6AUD  DD UNIT=SYSDA,SPACE=(CYL,2),
//         DCB=(RECFM=BFS,BLKSIZE=8ØØ,LRECL=8Ø)
//SYSOUT   DD SYSOUT=A
//SYSUDUMP DD SYSOUT=A
//PØ7AUDØ3 EXEC PGM=PØ7AUD,COND=(1111,EQ),TIME=24Ø
//IAØAAUD  DD DSN=AUD.CABS.AØAAUD,DISP=(OLD,PASS,KEEP)
//WAØ6AUD  DD DSN=AUD.CABS.AØ6AUD,DISP=(OLD,DELETE,KEEP)
//OAØ7AUD  DD DSN=AUD.CABS.&CYC..AØ7AUD(+1),UNIT=TAPE9,
//         DCB=(RECFM=BFS,BLKSIZE=1Ø9Ø,LRECL=1Ø9),
//         DISP=(NEW,CATLG,DELETE),LABEL=RETPD=14
//WBØ7AUD  DD DSN=AUD.WORKTAPE,UNIT=(TAPE9,,DEFER),
//            DISP=(NEW,DELETE),LABEL=RETPD=Ø,
//            DCB=(RECFM=BFS,BLKSIZE=3498,LRECL=1Ø6)
//WCØ7AUD  DD UNIT=SYSDA,SPACE=(CYL,(4Ø,1Ø),RLSE),
//         DCB=(RECFM=BFS,BLKSIZE=3498,LRECL=1Ø6)
//SORTLIB  DD DSN=SYS1.SORTLIB,DISP=SHR
//SORTWKØ1 DD UNIT=SYSDA,SPACE=(CYL,48,,CONTIG)
//SORTWKØ2 DD UNIT=SYSDA,SPACE=(CYL,48,,CONTIG)
//SORTWKØ3 DD UNIT=SYSDA,SPACE=(CYL,48,,CONTIG)
//SORTWKØ4 DD UNIT=SYSDA,SPACE=(CYL,48,,CONTIG)
//SORTWKØ5 DD UNIT=SYSDA,SPACE=(CYL,48,,CONTIG)
//SORTWKØ6 DD UNIT=SYSDA,SPACE=(CYL,48,,CONTIG)
//SYSOUT   DD SYSOUT=A
//SYSUDUMP DD SYSOUT=A
//PØ8AUDØ4 EXEC PGM=PØ8AUD,COND=(1111,EQ),TIME=24Ø
//SYSIN    DD  DUMMY,DCB=BLKSIZE=8Ø
//IAØAAUD  DD DSN=AUD.CABS.AØAAUD,DISP=(OLD,DELETE)
//IAØ7AUD  DD DSN=AUD.CABS.&CYC..AØ7AUD(+1),DISP=(OLD,KEEP)
//OAØ8AUD  DD DSN=AUD.CABS.AØ8AUD,UNIT=TAPE9,DISP=(NEW,KEEP),
//         VOL=(,,,16),DCB=(RECFM=BFS,BLKSIZE=133Ø,LRECL=133),
//         LABEL=RETPD=7
//SYSOUT   DD SYSOUT=A
//SYSUDUMP DD SYSOUT=A
```

Figure 3.7-01

JOB CONTROL STATEMENT CARD DECK LISTING - DOS

```
// JOB AUDTØ4  C1DØR     CABS STAFF WORK REPORT            CYC=AOC
*  JOB STEP PØ6AUDØ1
// TLBL UIN,'AOC.AØAAUD'
// DLBL UOUT,'AAAAUD',Ø,SD
// EXTENT SYSØ21,WRK1&P,1,Ø,2Ø,Ø6Ø,B=1
// EXEC TDYNASN
// ASSGN SYSØØ4,DUMMY
/*
// EXEC TPDK
// UTD TC,FF,A=(12Ø,12ØØ),B=(12Ø,12ØØ),IU,OY,R1,E=(2314)
// END
*  JOB STEP PØ6AUDØ2
// TLBL IBØ2AUD,'AOC.BØ2AUD'       CABS BUDGET DATA AOC
// DLBL IAOAAUD,'AAAAUD'
// EXTENT SYSØ21,WRK1&P,1,Ø,2Ø,1,B=1
// DLBL WAØ6AUD,'AØ6AUD'
// EXTENT SYSØ21,WRK1&P,1,Ø,2Ø,9ØØ,B=1
// DLBL WBØ6AUD,'BØ6AUD'
// EXTENT SYSØ21,WRK1&P,1,Ø,2Ø,Ø4Ø,B=1
// EXEC PØ6AUD
/*       PLACE PØ6AUD CONTROL CARD BEFORE THIS CARD
*  JOB STEP PØ7AUDØ3
// ASSGN SYSØØ1,X'DK2'
// TLBL OAØ7AUD,'AOC.AØ7AUD'       CABS INTERMEDIATE FILE AOC
// DLBL IAØAAUD,'AAAAUD'
// EXTENT SYSØ21,WRK1&P,1,Ø,2Ø,1,B=1
// DLBL WAØ6AUD,'AØ6AUD,D'
// EXTENT SYSØ21,WRK1&P,1,Ø,2Ø,1,B=1
// DLBL WBØ7AUD,'BØ7AUD,D'
// EXTENT SYSØ21,WRK1&P,1,Ø,2Ø,9ØØ,B=1
// DLBL WCØ7AUD,'CØ7AUD,D'
// EXTENT SYSØ21,WRK1&P,1,Ø,2Ø,4ØØ,B=1
// DLBL SORTWK1,'JØ7AUD'
// EXTENT SYSØØ1,WRK2&P,1,Ø,2Ø,1ØØ,B=1
// EXEC PØ7AUD
/*
```

Figure 3.7-01

JOB CONTROL STATEMENT CARD DECK LISTING - DOS (CONTINUED)

```
*  JOB STEP PØ8AUDØ4
// TLBL IAØ7AUD,'AOC.AØ7AUD'       CABS INTERMEDIATE FILE AOC
// DLBL IAØAAUD,'AAAAUD'
// EXTENT SYSØ21,WRK1&P,1,Ø,2Ø,Ø4Ø,B=1
// DLBL OAØ8AUD,'AØ8AUD,D'     PRINTFILE
// EXTENT SYSØ21,WRK1&P,1,Ø,2Ø,1,B=1
// TLBL OYØ8AUD,'YØ8AUD'       SPOOL OUTPUT
// EXEC TDYNASN
OPEN OYØ8AUD,SYSØ13,OUTPUT
/*
// EXEC PØ8AUD
/*       PLACE PØ8AUD CONTROL CARD BEFORE THIS CARD
// EXEC TDYNASN
CLOSE OYØ8AUD,SYSØ13,OUTPUT
/*
CLOSE SYSØ13
/*
// DLBL IAØAAUD,'AAAAUD'
// EXTENT SYSØ21,WRK1&P,1,Ø,2Ø,1,B=1
// DLBL WBØ6AUD,'BØ6AUD'
// EXTENT SYSØ21,WRK1&P,1,Ø,2Ø,1,B=1
// DLBL OAØ8AUD,'AØ8AUD,D'     PRINTFILE
// EXTENT SYSØ21,WRK1&P,1,Ø,2Ø,1,B=1
// EXEC ADASD
/*
/&
```

Figure C.7-01

JOB CONTROL STATEMENT CARD DECK LISTING - DOS (CONTINUED)

```
// JOB AUDTØ4  C1DØR     CABS STAFF WORK REPORT            CYC=COB
*  JOB STEP PØ6AUDØ1
// TLBL UIN,'COB.AØAAUD'
// DLBL UOUT,'AAAAUD',Ø,SD
// EXTENT SYSØ21,WRK1&P,1,Ø,2Ø,Ø6Ø,B=1
// EXEC TDYNASN
// ASSGN SYSØØ4,DUMMY
/*
// EXEC TPDK
// UTD TC,FF,A=(12Ø,12ØØ),B=(12Ø,12ØØ),IU,OY,R1,E=(2314)
// END
*  JOB STEP PØ6AUDØ2
// TLBL IBØ2AUD,'COB.BØ2AUD'       CABS BUDGET DATA COB
// DLBL IAOAAUD,'AAAAUD'
// EXTENT SYSØ21,WRK1&P,1,Ø,2Ø,1,B=1
// DLBL WAØ6AUD,'AØ6AUD'
// EXTENT SYSØ21,WRK1&P,1,Ø,2Ø,9ØØ,B=1
// DLBL WBØ6AUD,'BØ6AUD'
// EXTENT SYSØ21,WRK1&P,1,Ø,2Ø,Ø4Ø,B=1
// EXEC PØ6AUD
/*       PLACE PØ6AUD CONTROL CARD BEFORE THIS CARD
*  JOB STEP PØ7AUDØ3
// ASSGN SYSØØ1,X'DK2'
// TLBL OAØ7AUD,'COB.AØ7AUD'       CABS INTERMEDIATE FILE COB
// DLBL IAØAAUD,'AAAAUD'
// EXTENT SYSØ21,WRK1&P,1,Ø,2Ø,1,B=1
// DLBL WAØ6AUD,'AØ6AUD,D'
// EXTENT SYSØ21,WRK1&P,1,Ø,2Ø,1,B=1
// DLBL WBØ7AUD,'BØ7AUD,D'
// EXTENT SYSØ21,WRK1&P,1,Ø,2Ø,9ØØ,B=1
// DLBL WCØ7AUD,'CØ7AUD,D'
// EXTENT SYSØ21,WRK1&P,1,Ø,2Ø,4ØØ,B=1
// DLBL SORTWK1,'JØ7AUD'
// EXTENT SYSØØ1,WRK2&P,1,Ø,2Ø,1ØØ,B=1
// EXEC PØ7AUD
/*
```

Figure 3.7-01

JOB CONTROL STATEMENT CARD DECK LISTING - DOS (CONTINUED)

```
*  JOB STEP PØ8AUDØ4
// TLBL IAØ7AUD,'COB.AØ7AUD'       CABS INTERMEDIATE FILE COB
// DLBL IAØAAUD,'AAAAUD'
// EXTENT SYSØ21,WRK1&P,1,Ø,2Ø,Ø4Ø,B=1
// DLBL OAØ8AUD,'AØ8AUD,D'     PRINTFILE
// EXTENT SYSØ21,WRK1&P,1,Ø,2Ø,1,B=1
// TLBL OYØ8AUD,'YØ8AUD'       SPOOL OUTPUT
// EXEC TDYNASN
OPEN OYØ8AUD,SYSØ13,OUTPUT
/*
// EXEC PØ8AUD
/*       PLACE PØ8AUD CONTROL CARD BEFORE THIS CARD
// EXEC TDYNASN
CLOSE OYØ8AUD,SYSØ13,OUTPUT
/*
CLOSE SYSØ13
/*
// DLBL IAØAAUD,'AAAAUD'
// EXTENT SYSØ21,WRK1&P,1,Ø,2Ø,1,B=1
// DLBL WBØ6AUD,'BØ6AUD'
// EXTENT SYSØ21,WRK1&P,1,Ø,2Ø,1,B=1
// DLBL OAØ8AUD,'AØ8AUD,D'     PRINTFILE
// EXTENT SYSØ21,WRK1&P,1,Ø,2Ø,1,B=1
// EXEC ADASD
/*
/&
```

Figure 3.7-01

JOB CONTROL STATEMENT CARD DECK LISTING - DOS (CONTINUED)

```
// JOB AUDTØ4  C1DØR     CABS STAFF WORK REPORT              CYC=OBL
*  JOB STEP PØ6AUDØ1
// TLBL UIN,'OBL.AØAAUD'
// DLBL UOUT,'AAAAUD',Ø,SD
// EXTENT SYSØ21,WRK1&P,1,Ø,2Ø,Ø6Ø,B=1
// EXEC TDYNASN
// ASSGN SYSØØ4,DUMMY
/*
// EXEC TPDK
// UTD TC,FF,A=(12Ø,12ØØ),B=(12Ø,12ØØ),IU,OY,R1,E=(2314)
// END
*  JOB STEP PØ6AUDØ2
// TLBL IBØ2AUD,'OBL.BØ2AUD'       CABS BUDGET DATA OBL
// DLBL IAOAAUD,'AAAAUD'
// EXTENT SYSØ21,WRK1&P,1,Ø,2Ø,1,B=1
// DLBL WAØ6AUD,'AØ6AUD'
// EXTENT SYSØ21,WRK1&P,1,Ø,2Ø,9ØØ,B=1
// DLBL WBØ6AUD,'BØ6AUD'
// EXTENT SYSØ21,WRK1&P,1,Ø,2Ø,Ø4Ø,B=1
// EXEC PØ6AUD
/*       PLACE PØ6AUD CONTROL CARD BEFORE THIS CARD
*  JOB STEP PØ7AUDØ3
// ASSGN SYSØØ1,X'DK2'
// TLBL OAØ7AUD,'OBL.AØ7AUD'       CABS INTERMEDIATE FILE OBL
// DLBL IAØAAUD,'AAAAUD'
// EXTENT SYSØ21,WRK1&P,1,Ø,2Ø,1,B=1
// DLBL WAØ6AUD,'AØ6AUD,D'
// EXTENT SYSØ21,WRK1&P,1,Ø,2Ø,1,B=1
// DLBL WBØ7AUD,'BØ7AUD,D'
// EXTENT SYSØ21,WRK1&P,1,Ø,2Ø,9ØØ,B=1
// DLBL WCØ7AUD,'CØ7AUD,D'
// EXTENT SYSØ21,WRK1&P,1,Ø,2Ø,4ØØ,B=1
// DLBL SORTWK1,'JØ7AUD'
// EXTENT SYSØØ1,WRK2&P,1,Ø,2Ø,1ØØ,B=1
// EXEC PØ7AUD
/*
```

Figure 3.7-01

JOB CONTROL STATEMENT CARD DECK LISTING - DOS (CONTINUED)

```
*  JOB STEP PØ8AUDØ4
// TLBL IAØ7AUD,'OBL.AØ7AUD'       CABS INTERMEDIATE FILE OBL
// DLBL IAØAAUD,'AAAAUD'
// EXTENT SYSØ21,WRK1&P,1,Ø,2Ø,Ø4Ø,B=1
// DLBL OAØ8AUD,'AØ8AUD,D'     PRINTFILE
// EXTENT SYSØ21,WRK1&P,1,Ø,2Ø,1,B=1
// TLBL OYØ8AUD,'YØ8AUD'       SPOOL OUTPUT
// EXEC TDYNASN
OPEN OYØ8AUD,SYSØ13,OUTPUT
/*
// EXEC PØ8AUD
/*       PLACE PØ8AUD CONTROL CARD BEFORE THIS CARD
// EXEC TDYNASN
CLOSE OYØ8AUD,SYSØ13,OUTPUT
/*
CLOSE SYSØ13
/*
// DLBL IAØAAUD,'AAAAUD'
// EXTENT SYSØ21,WRK1&P,1,Ø,2Ø,1,B=1
// DLBL WBØ6AUD,'BØ6AUD'
// EXTENT SYSØ21,WRK1&P,1,Ø,2Ø,1,B=1
// DLBL OAØ8AUD,'AØ8AUD,D'     PRINTFILE
// EXTENT SYSØ21,WRK1&P,1,Ø,2Ø,1,B=1
// EXEC ADASD
/*
/&
```

Figure 3.7-01

JOB CONTROL STATEMENT CARD DECK LISTING - DOS (CONTINUED)

```
// JOB AUDTØ4  C1DØR     CABS STAFF WORK REPORT              CYC=SOR
*  JOB STEP PØ6AUDØ1
// TLBL UIN,'SOR.AØAAUD'
// DLBL UOUT,'AAAAUD',Ø,SD
// EXTENT SYSØ21,WRK1&P,1,Ø,2Ø,Ø6Ø,B=1
// EXEC TDYNASN
// ASSGN SYSØØ4,DUMMY
/*
// EXEC TPDK
// UTD TC,FF,A=(12Ø,12ØØ),B=(12Ø,12ØØ),IU,OY,R1,E=(2314)
// END
*  JOB STEP PØ6AUDØ2
// TLBL IBØ2AUD,'SOR.BØ2AUD'       CABS BUDGET DATA SOR
// DLBL IAOAAUD,'AAAAUD'
// EXTENT SYSØ21,WRK1&P,1,Ø,2Ø,1,B=1
// DLBL WAØ6AUD,'AØ6AUD'
// EXTENT SYSØ21,WRK1&P,1,Ø,2Ø,9ØØ,B=1
// DLBL WBØ6AUD,'BØ6AUD'
// EXTENT SYSØ21,WRK1&P,1,Ø,2Ø,Ø4Ø,B=1
// EXEC PØ6AUD
/*       PLACE PØ6AUD CONTROL CARD BEFORE THIS CARD
*  JOB STEP PØ7AUDØ3
// ASSGN SYSØØ1,X'DK2'
// TLBL OAØ7AUD,'SOR.AØ7AUD'       CABS INTERMEDIATE FILE SOR
// DLBL IAØAAUD,'AAAAUD'
// EXTENT SYSØ21,WRK1&P,1,Ø,2Ø,1,B=1
// DLBL WAØ6AUD,'AØ6AUD,D'
// EXTENT SYSØ21,WRK1&P,1,Ø,2Ø,1,B=1
// DLBL WBØ7AUD,'BØ7AUD,D'
// EXTENT SYSØ21,WRK1&P,1,Ø,2Ø,9ØØ,B=1
// DLBL WCØ7AUD,'CØ7AUD,D'
// EXTENT SYSØ21,WRK1&P,1,Ø,2Ø,4ØØ,B=1
// DLBL SORTWK1,'JØ7AUD'
// EXTENT SYSØØ1,WRK2&P,1,Ø,2Ø,1ØØ,B=1
// EXEC PØ7AUD
/*
```

Figure 3.7-01

JOB CONTROL STATEMENT CARD DECK LISTING - DOS (CONTINUED)

```
*  JOB STEP PØ8AUDØ4
// TLBL IAØ7AUD,'SOR.AØ7AUD'       CABS INTERMEDIATE FILE SOR
// DLBL IAØAAUD,'AAAAUD'
// EXTENT SYSØ21,WRK1&P,1,Ø,2Ø,Ø4Ø,B=1
// DLBL OAØ8AUD,'AØ8AUD,D'     PRINTFILE
// EXTENT SYSØ21,WRK1&P,1,Ø,2Ø,1,B=1
// TLBL OYØ8AUD,'YØ8AUD'       SPOOL OUTPUT
// EXEC TDYNASN
OPEN OYØ8AUD,SYSØ13,OUTPUT
/*
// EXEC PØ8AUD
/*       PLACE PØ8AUD CONTROL CARD BEFORE THIS CARD
// EXEC TDYNASN
CLOSE OYØ8AUD,SYSØ13,OUTPUT
/*
CLOSE SYSØ13
/*
// DLBL IAØAAUD,'AAAAUD'
// EXTENT SYSØ21,WRK1&P,1,Ø,2Ø,1,B=1
// DLBL WBØ6AUD,'BØ6AUD'
// EXTENT SYSØ21,WRK1&P,1,Ø,2Ø,1,B=1
// DLBL OAØ8AUD,'AØ8AUD,D'     PRINTFILE
// EXTENT SYSØ21,WRK1&P,1,Ø,2Ø,1,B=1
// EXEC ADASD
/*
/&
```

Figure 3.7-01

JOB CONTROL STATEMENT (RETRIEVAL) - OS

RUN ID: AUDTØ4
RUN NAME: CABS STAFF WORKING REPORT

NORMAL RUN

```
//AUDTØ4   JOB (accounting information)
//AUDTØ4Ø1 EXEC AUDTØ4S1,CYC=XXX      (See Note 2)
//PØ6AUDØ2.SYSIN DD *
PØ6AUD-CNTL                          (user control card options)
/*
//PØ6AUDØ2.IBØ2AUD DD DSN=AUD.CABS.&CYC..BØ9AUD(Ø) *omit if station data run*
//PØ8AUDØ4.SYSIN DD *
PØ8AUD-CNTL                          (user control card options)
/*
//
```

STEP RESTART AT PROGRAM PØ8AUD

```
//AUDTØ4   JOB (accounting information),RESTART=AUDTØ4Ø1.PØ8AUDØ4
//AUDTØ4Ø1 EXEC AUDTØ4S1,CYC=XXX      (See Note 2)
//PØ8AUDØ4.SYSIN DD *
PØ8AUD-CNTL (user control card options)
/*
//PØ8AUDØ4.IAØAAUD DD DSN=AUD.CABS.&CYC..AØAAUD(Ø),UNIT=TAPE9,DISP=(OLD,KEEP)
//PØ8AUDØ4.IAØ7AUD DD DSN=AUD.CABS.&CYC..AØAAUD(Ø),UNIT=TAPE9,DISP=(OLD,KEEP)
//
```

NOTE 1: See Control Card Format of "PØ8AUD-CNTL" Reference use of Restart Report Number (RESTART-RPT-NR).

NOTE 2: On EXEC Card, substitute for XXX the appropriate value to indicate type of run:

COB, AOC, ORL, SOR

Figure 3.7-01

RUN SETUP—CONSOLE OPERATING INFORMATION
For use of this form, see TB 18-111; the proponent agency is CSA.

1. DATE: 811201

2. RUN ID	3. RUN TITLE	4. SECLAS/PRIV
AUDTØ4	CABS STAFF WORKING REPORTS	U/N

5. PERIPHERAL EQUIPMENT

TAPE DRIVES	2
DISK DRIVES	1
CARD READER	1
CARD PUNCH	Ø
PRINTER	1
OTHER	Ø

6. CORE REQ	7. POINT OF CONTACT	8. RUN AS OF	9. RUN DATE
72K			

10. CONT CD ID	11. DATE/TIME SCH IN	12. DATE/TIME SCH OUT
PØ6AUD-CNTL PØ8AUD-CNTL		

13. SYSTEM	14. RUN NO.	15. EST TIME	16. LANGUAGE
OS/DOS		12Ø MIN.	COBOL

17. ID CODE	18. FILE ID	19. VOLUME NO.	20. I/O	21. MEDIA	22. UNIT	23. RETN	24. SECLAS/ PRIV	25. SOURCE	26. DISPOSITION	27. OPERATOR NOTES
IEBGENØ1	AØAAUD		I	TAPE			U/N	LIBRARY	LIBRARY	
	AØAAUD		O	DISK	SYSDA		U/N	SCRATCH	PØ6AUDØ2	
PØ6AUDØ2	AØAAUD		I	DISK	SYSDA		U/N	IEBGENØ1	PØ7AUDØ3	
	AØ6AUD		O	DISK	SYSDA		U/N	SCRATCH	PØ7AUDØ3	
	BØ2AUD 1/		I	TAPE			U/N	LIBRARY	LIBRARY	
	BØ9AUD 1/		I	TAPE			U/N	LIBRARY	LIBRARY	
PØ7AUDØ3	AØAAUD		I	DISK	SYSDA		U/N	PØ6AUDØ2	PØ8AUDØ4	
	AØ6AUD		I	DISK	SYSDA		U/N	PØ6AUDØ2	SCRATCH	
	AØ7AUD		O	TAPE		D14	U/N	SCRATCH	PØ8AUDØ4	

28. REMARKS

1/ MUTUALLY EXCLUSIVE

DA FORM 1 NOV 78 4744

*U.S. Government Printing Office: 1980—310-981/8858

Figure 3.7-01

RUN SETUP--CONSOLE OPERATING INFORMATION

For use of this form, see TB 18-111; the proponent agency is CSA.

1. DATE: 811201

2. RUN ID	3. RUN TITLE	4. SECLAS/PRIV
AUDTØ4	CABS STAFF WORKING REPORTS (CONTINUED)	

6. CORE REQ	7. POINT OF CONTACT	8. RUN AS OF	9. RUN DATE

10. CONT CD ID	11. DATE/TIME SCH IN	12. DATE/TIME SCH OUT

13. SYSTEM	14. RUN NO.	15. EST TIME	16. LANGUAGE

5. PERIPHERAL EQUIPMENT

TAPE DRIVES _____
DISK DRIVES _____
CARD READER _____
CARD PUNCH _____
PRINTER _____
OTHER _____ _____

17. ID CODE	18. FILE ID	19. VOLUME NO.	20. I/O	21. MEDIA	22. UNIT	23. RETN	24. SECLAS/ PRIV	25. SOURCE	26. DISPOSITION	27. OPERATOR NOTES
PØ8AUDØ4	AØAAUD		I	DISK	SYSDA		U/N	PØ7AUDØ3	SCRATCH	
	AØ7AUD		I	TAPE			U/N	PØ7AUDØ3	LIBRARY	
	AØ8AUD	*	O	TAPE		DØ7	U/N	SCRATCH	SPOOL/LIBRARY	
	YØ8AUD	**	O	TAPE		DØ7	U/N	SCRATCH	SPOOL/LIBRARY	

28. REMARKS

* OS only.
** DOS only.

DA FORM 1 NOV 78 4744

U.S. Government Printing Office: 1980—310-981/8838

Figure 3.7-01

RUN MESSAGES AND RESPONSES For use of this form, see TB 18-111; the proponent agency is CSA.	1. DATE 811201
2. RUN ID AUDTØ4	3. RUN TITLE CABS STAFF WORKING REPORTS

4. MESSAGE DISPLAYED	5. ACTION REQUIRED
CONSOLE MESSAGES:	
SAME AS SYSOUT/SYSLST	
SYSOUT/SYSLST MESSAGES:	
PØ6AUD Ø1 H NO RSNS FOR SPECIAL	The special staff work report option is invoked by the control card and there are no RSN codes on the RSN parameter record. The run is stopped. Notify the CABS analyst.
PØ6AUD Ø2 H NO MATCHING RSNS FOR SPECIAL	The special staff work report option is invoked by the control card and the RSN codes in the budget data do not match the RSN codes in the RSN parameter record. The run is stopped. Notify the CABS analyst.
PØ6AUD 11 H CTL CARD INVALID	Control card accepted from SYSIN is missing or invalid. Correct and restart.
PØ7AUD Ø1 W NO TYPE L RCD FOR THIS TYPE M RCD THIS TYPE M RCD EXCLUDED: value	Processing continues: however, the CABS analyst must be notified of the unmatched condition.
PØ7AUD Ø2 H TYPE M RCDS EXCEED LIMIT	The type M control records exceed limit established in the users manual. update the control file. The run is stopped. Notify the CABS analyst.
PØ7AUD Ø3 H INVALID SORT	The sort failed for an unknown reason. Determine the cause for the failure, correct and restart the run.

6. REMARKS

DA FORM 1 NOV 78 4745

Figure 3.7-01

RUN MESSAGES AND RESPONSES For use of this form, see TB 18-111; the proponent agency is CSA.	1. DATE 811201
2. RUN ID AUDTØ4	3. RUN TITLE CABS STAFF WORKING REPORTS (CONTINUED)

4. MESSAGE DISPLAYED	5. ACTION REQUIRED
PØ7AUD 11 H NO INPUT RECORDS	No records found on input file (from PØ6AUD). Determine cause and restart the run.
PØ7AUD 11 H CNTL RECORD MISSING	The first input record (from PØ6AUD) is not a valid 'CONTROL CARD' record. Determine the cause and restart the run.
PØ8AUD Ø2 H RESTART REPORT NUMBER NOT FOUND	The report control number in the control card does not match a report control number in the input data. The run is stopped. Notify the CABS analyst.
PØ8AUD Ø3 H TYPE D RCDS EXCEED LIMIT	The type D control records exceed limit established in the users manual documentation. Update the control file. The run is stopped. Notify the CABS analyst.
PØ8AUD Ø4 H TYPE K RCDS EXCEED LIMIT	The type K control records exceed limit established in the users manual. Update the control file. The run is stopped. Notify the CABS analyst.
PØ8AUD Ø5 H TYPE L RCDS EXCEED LIMIT	The type L control records exceed limit established in the users documentation. Update the control file. The run is stopped. Notify the CABS analyst.

6. REMARKS

DA FORM 1 NOV 78 4745

Figure 3.7-01

RUN MESSAGES AND RESPONSES For use of this form, see TB 18-111; the proponent agency is CSA.	1. DATE 811201
2. RUN ID AUDTØ4	3. RUN TITLE CABS STAFF WORKING REPORTS (CONTINUED)

4. MESSAGE DISPLAYED	5. ACTION REQUIRED
PØ8AUD Ø6 W NO TYPE D CTL RCD FOR RSN XXX. COMMAND CODE YYY	None, processing continues.
PØ8AUD Ø7 W NO TYPE K CTL RCD FOR RSN XXX. COMMAND CODE YYY	None, processing continues.
PØ8AUD Ø8 W NO TYPE L CTL RCD FOR THIS DATA RCD value	Processing continues: however, this record is excluded from the staff working reports.
PØ8AUD 11 H INVALID CTL CARD	Control card accepted from SYSIN is missing or invalid; correct and restart the run.

6. REMARKS

DA FORM 1 NOV 78 4745

Figure 3.7-01

LOGIC CHART For use of this form, see TB 18-111; the proponent agency is CSA.	1. DATE 811201
2. ID AUDT04	3. TITLE CABS STAFF WORKING REPORTS

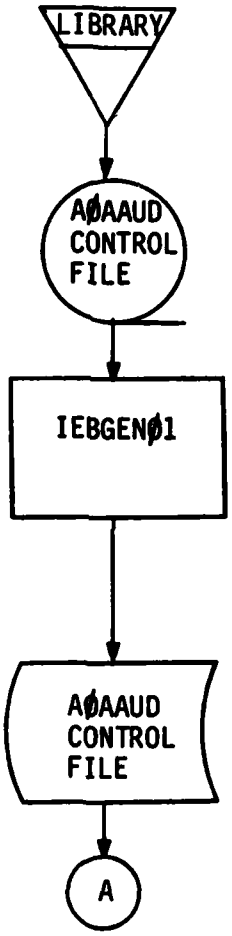

DA FORM 1 NOV 78 4735

Figure 3.7-01

LOGIC CHART
For use of this form, see TB 18-111; the proponent agency is CSA.

1. DATE: 811201

2. ID: AUDT04

3. TITLE: CABS STAFF WORKING REPORTS (CONTINUED)

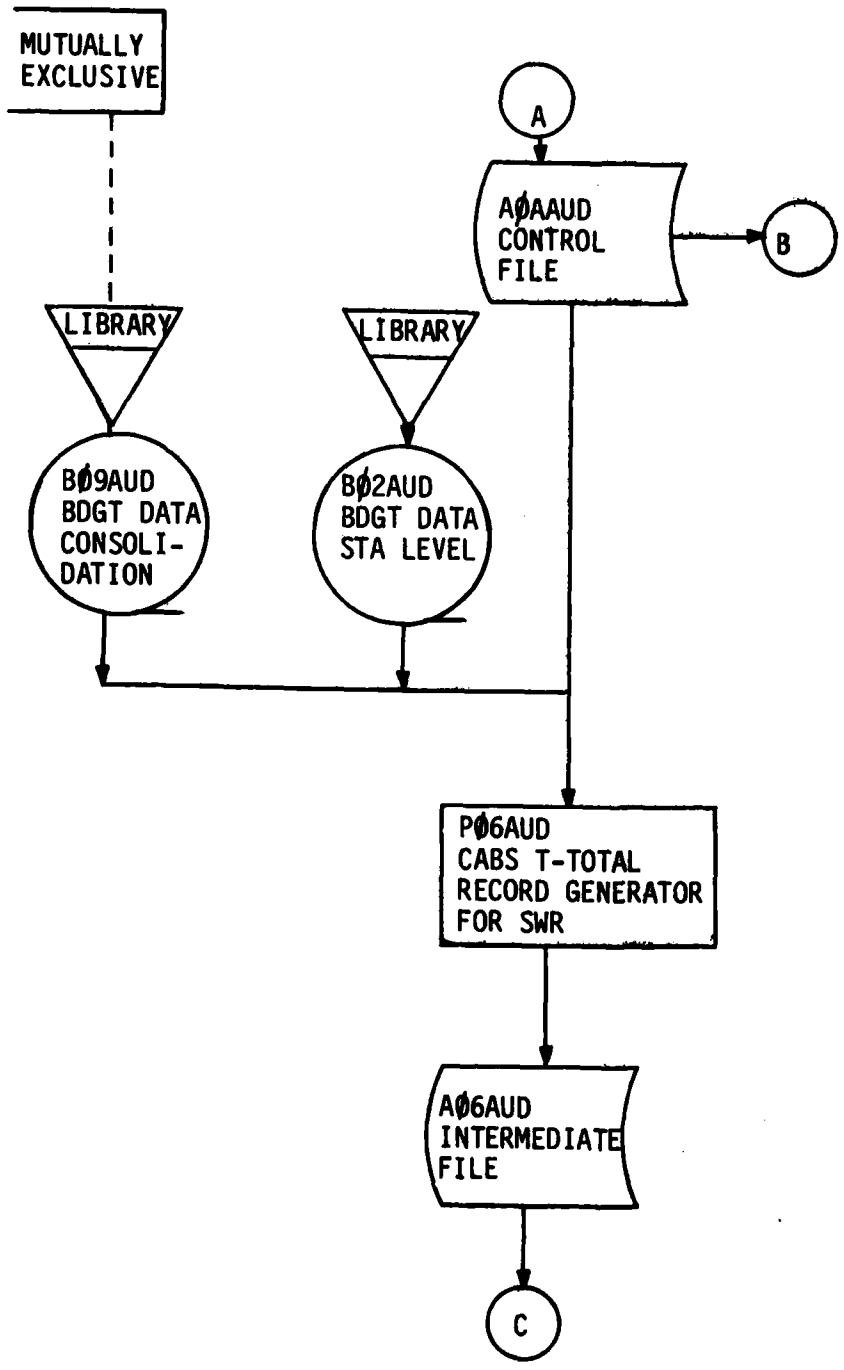

DA FORM 1 NOV 78 4735

Figure 3.7-01

LOGIC CHART For use of this form, see TB 18-111; the proponent agency is CSA.	1. DATE 811201
2. ID AUDT04	3. TITLE CABS STAFF WORKING REPORTS (CONTINUED)

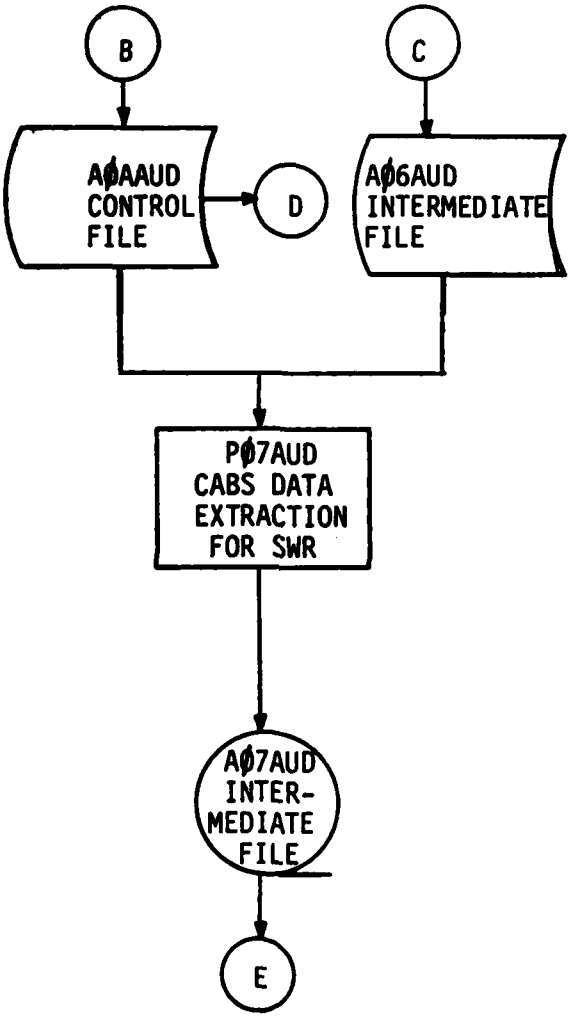

DA FORM 1 NOV 78 4735

Figure 3.7-01

LOGIC CHART
For use of this form, see TB 18-111; the proponent agency is CSA.

1. DATE: 811201

2. ID: AUDT04

3. TITLE: CABS STAFF WORKING REPORTS (CONTINUED)

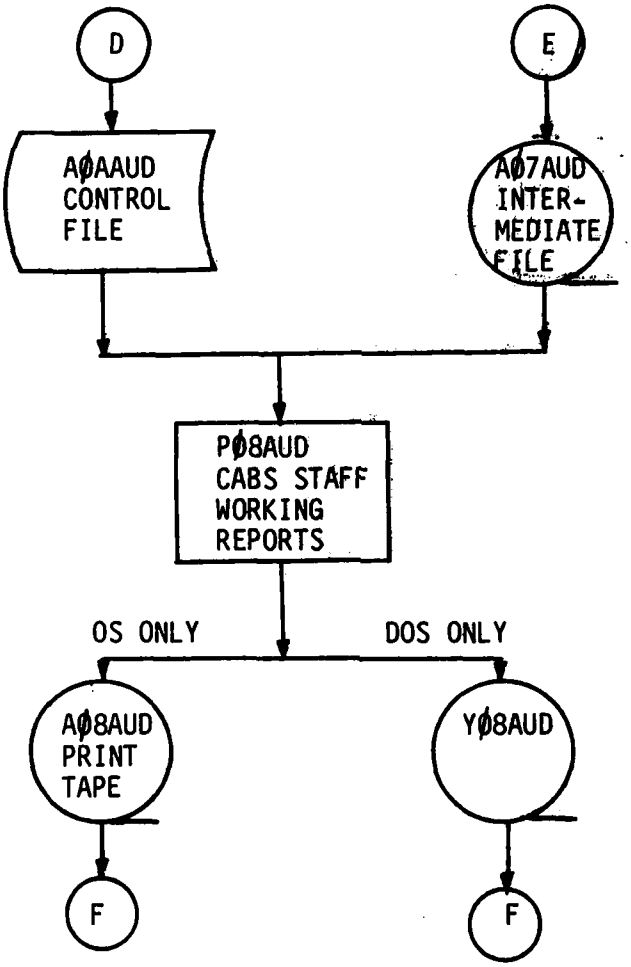

DA FORM 1 NOV 78 4735

Figure 3.7-01

LOGIC CHART For use of this form, see TB 18-111; the proponent agency is CSA.	1. DATE 811201
2. ID AUDT04	3. TITLE CABS STAFF WORKING REPORTS (CONTINUED)

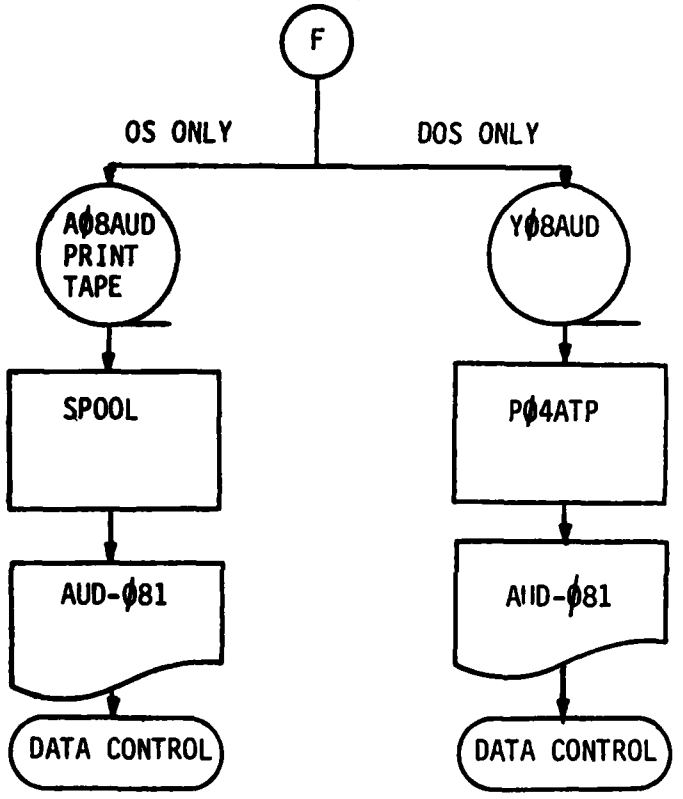

DA FORM 1 NOV 78 4735

Figure 3.7-01

OUTPUT REPORTS

For use of this form, see TB 18-111; the proponent agency is CSA.

1. RUN ID	2. DATE
AUDTØ4	811201

3. FILE ID	4. MEDIA	5. PCN/RCS	6. SECLAS/ PRIV	7. PRINTER					8. VOLUME	9. REPORT TITLE	10. DISPOSITION
				PAPER a.	NO. OF CYS b.	TAPE c.	PRINT POS d.	LINE UP e.			
AØ8AUD	TAPE	AUD-Ø81	U/N							CABS BUDGET DATA STAFF WORKING REPORTS	PGM/BDGT DIVISION

11. REMARKS

DA FORM 1 NOV 78 4748

Figure 3.7-01

RECOVERY INSTRUCTIONS For use of this form, see TB 18-111; the proponent agency is CSA.	1. DATE 811201
2. RUN ID AUDTØ4	3. RUN TITLE CABS STAFF WORKING REPORTS

4. ID CODE	5. RECOVERY INSTRUCTIONS
IEBGENØ1	Restart with the original input and JCL setup.
PØ6AUDØ2	Restart with the original input and JCL setup.
PØ7AUDØ3	Restart with the original input and JCL setup.
PØ8AUDØ4	If it appears that no problem existed prior to this step; run may be restarted at this step, using current Control File (AØAAUD) and the Intermediate File (AØ7AUD, from the preceding step) as input. See example on JOB CONTROL STATEMENTS (RETRIEVAL) for AUDTØ4.

6. REMARKS

DA FORM 1 NOV 78 4751

Figure 3.7-01

(Blank Page)

3.8 Run Description AUDTØ5. Reference Figure 3.8-01

INDEX FOR FIGURE 3.8-01

	NAME	PAGE NO.
3.8.1	Control Inputs	
3.8.1.1	Control Cards	3-100
3.8.1.2	Control Input Statements	NA
3.8.1.2.1	Job Control Statements (PROC)	3-101 thru 3-103
3.8.1.2.2	Job Control Statements (RETRIEVAL)	3-104
3.8.2	Management Information	
3.8.2.1	Run Setup-Console Operating Information	3-105
3.8.2.2	Run Messages and Responses	3-106
3.8.2.3	Logic Chart	3-107
3.8.3	Input-Output Files	See DA Form 4744 for the I/O File Information
3.8.4	Output Reports	NA
3.8.5	Reproduced Output Reports	
3.8.5.1	Reproduced Output Reports	NA
3.8.5.2	PCM Processing Instructions	NA
3.8.6	Restart/Recovery Procedures	
3.8.6.1	Recovery Instructions	3-108

CONTROL CARD PREPARATION
For use of this form, see TB 18-111; the proponent agency is CSA.

1. DATE: 811201

2. RUN ID	3. RUN TITLE
AUDTØ5	CABS CONSOLIDATION
4. CONTROL CARD ID	**5. CONTROL CARD TITLE**
PØ9AUD-CNTL	PØ9AUD-CONTROL CARD

6. CONTROL CARD PURPOSE AND REMARKS

To provide program parameter options.

7. USER INFORMATION, IF REQUIRED

8. CONTROL CARD INSTRUCTIONS

FIELD a.	POSITION b.	PREPARATION INSTRUCTIONS c.	RESPONSIBLE AGENCY d.
CNTL-ID	1 11	Constant "PØ9AUD-CNTL"	
	12	Blank	
RUN-LEVEL	13 17	"INSTL" to consolidate data by first two positions of station code (for use in installation runs). "MACOM" to consolidate data for the command (blanking station codes) for MACOM runs.	Functional user
	18	Blank	
CMD-RQMT-CTL	19 22	"OMIT" to omit from output those records with "1" in Command-Requirement-Code; else "KEEP".	Functional user
	23 8Ø	Blank	

DA FORM 1 NOV 78 4743

Figure 3.8-01

JOB CONTROL STATEMENTS (PROC) - OS

```
//AUDTØ5S1 PROC CYC=COB
//*
//*  ********************************************************************
//*  *THIS PROC CONSOLIDATES BUDGET DATA AT INSTALLATION LEVEL BY   *
//*  *2-POS STATION CODE, OR AT MACOM LEVEL WITH NO STATION CODE    *
//*  ********************************************************************
//*
//PØ9AUDØ1 EXEC PGM=PØ9AUD
//SYSIN    DD DUMMY
//IBØ2AUD  DD DSN=AUD.CABS.&CYC..BØ2AUD(Ø),DISP=OLD
//OBØ9AUD  DD DSN=AUD.CABS.&CYC..BØ9AUD(+1),UNIT=TAPE9,
//            DISP=(,CATLG,DELETE),
//            DCB=(RECFM=BFS,BLKSIZE=8ØØ,LRECL=8Ø),LABEL=RETPD=365
//WCØ9AUD  DD UNIT=SYSDA,SPACE=(CYL,(5Ø,2),RLSE),
            DCB=(RECFM=BFS,BLKSIZE=168Ø,LRECL=8Ø)
//SORTLIB  DD DSN=SYS1.SORTLIB,DISP=SHR
//SORTWKØ1 DD UNIT=SYSDA,SPACE=(CYL,2Ø,,CONTIG)
//SORTWKØ2 DD UNIT=SYSDA,SPACE=(CYL,2Ø,,CONTIG)
//SORTWKØ3 DD UNIT=SYSDA,SPACE=(CYL,2Ø,,CONTIG)
//SYSOUT   DD SYSOUT=A
//SYSUDUMP DD SYSOUT=A
```

Figure 3.8-01

JOB CONTROL STATEMENT CARD DECK LISTING - DOS

```
// JOB   AUDTØ5  C1DØR     CABS CONSOLIDATION              CYC=AOC
/* JOB STEP PØ9AUDØ1
// ASSGN SYSØØ1,X'DK2'          SORTWORK
// TLBL IBØ2AUD,'AOC.BØ2AUD'        CABS BUDGET DATA AOC
// TLBL OBØ9AUD,'AOC.BØ9AUD'        CABS BUDGET DATA CONSOLIDATED AOC
// DLBL WCØ9AUD,'CØ9AUD,D',Ø,SD
// EXTENT SYSØ23,WRK1&P,1,Ø,2Ø,1ØØ,B=1
// DLBL SORTWK1,'JØ2AUD',Ø,SD
// EXTENT SYSØØ1,WRK2&P,1,Ø,2Ø,1ØØ,B=1
// EXEC PØ9AUD
/*       PLACE PØ9AUD CONTROL CARD BEFORE THIS CARD
/&


// JOB   AUDTØ5  C1DØR     CABS CONSOLIDATION              CYC=COB
/* JOB STEP PØ9AUDØ1
// ASSGN SYSØØ1,X'DK2'          SORTWORK
// TLBL IBØ2AUD,'COB.BØ2AUD'        CABS BUDGET DATA COB
// TLBL OBØ9AUD,'COB.BØ9AUD'        CABS BUDGET DATA CONSOLIDATED COB
// DLBL WCØ9AUD,'CØ9AUD,D',Ø,SD
// EXTENT SYSØ23,WRK1&P,1,Ø,2Ø,1ØØ,B=1
// DLBL SORTWK1,'JØ2AUD',Ø,SD
// EXTENT SYSØØ1,WRK2&P,1,Ø,2Ø,1ØØ,B=1
// EXEC PØ9AUD
/*       PLACE PØ9AUD CONTROL CARD BEFORE THIS CARD
/&


// JOB   AUDTØ5  C1DØR     CABS CONSOLIDATION              CYC=OBL
/* JOB STEP PØ9AUDØ1
// ASSGN SYSØØ1,X'DK2'          SORTWORK
// TLBL IBØ2AUD,'OBL.BØ2AUD'        CABS BUDGET DATA OBL
// TLBL OBØ9AUD,'OBL.BØ9AUD'        CABS BUDGET DATA CONSOLIDATED OBL
// DLBL WCØ9AUD,'CØ9AUD,D',Ø,SD
// EXTENT SYSØ23,WRK1&P,1,Ø,2Ø,1ØØ,B=1
// DLBL SORTWK1,'JØ2AUD',Ø,SD
// EXTENT SYSØØ1,WRK2&P,1,Ø,2Ø,1ØØ,B=1
// EXEC PØ9AUD
/*       PLACE PØ9AUD CONTROL CARD BEFORE THIS CARD
/&
```

Figure 3.8-01

JOB CONTROL STATEMENT CARD DECK LISTING - DOS (CONTINUED)

```
// JOB   AUDTØ5  C1DØR     CABS CONSOLIDATION                CYC=SOR
/* JOB STEP PØ9AUDØ1
// ASSGN SYSØØ1,X'DK2'          SORTWORK
// TLBL IBØ2AUD,'SOR.BØ2AUD'        CABS BUDGET DATA SOR
// TLBL OBØ9AUD,'SOR.BØ9AUD'        CABS BUDGET DATA CONSOLIDATED SOR
// DLBL WCØ9AUD,'CØ9AUD,D',Ø,SD
// EXTENT SYSØ23,WRK1&P,1,Ø,2Ø,1ØØ,B=1
// DLBL SORTWK1,'JØ2AUD',Ø,SD
// EXTENT SYSØØ1,WRK2&P,1,Ø,2Ø,1ØØ,B=1
// EXEC PØ9AUD
/*       PLACE PØ9AUD CONTROL CARD BEFORE THIS CARD
/&
```

Figure 3.8-01

JOB CONTROL STATEMENT (RETRIEVAL) - OS

RUN ID: AUDTØ5
RUN NAME: CABS CONSOLIDATION

```
//AUDTØ5   JOB (accounting information)
//AUDTØ5Ø1 EXEC AUDTØ5S1,CYC=XXX      (See Note 1)
//PØ9AUDØ1.SYSIN DD *
PØ9AUD-CNTL                              (user control card options)
/*
//
```

NOTE 1: On EXEC Card, substitute for XXX the appropriate value to indicate type of run:

COB, AOC, OBL, SOR

Figure 3.8-01

RUN SETUP—CONSOLE OPERATING INFORMATION

For use of this form, see TB 18-111; the proponent agency is CSA.

1. DATE: 811201

2. RUN ID	3. RUN TITLE	4. SECLAS/PRIV
AUDTØ5	CABS CONSOLIDATION	U/N

6. CORE REQ	7. POINT OF CONTACT	8. RUN AS OF	9. RUN DATE
98K			

10. CONT CD ID	11. DATE/TIME SCH IN	12. DATE/TIME SCH OUT
PØ9AUD-CNTL		

13. SYSTEM	14. RUN NO.	15. EST TIME	16. LANGUAGE
OS/DOS		1Ø MIN.	COBOL

5. PERIPHERAL EQUIPMENT

TAPE DRIVES	2
DISK DRIVES	1
CARD READER	1
CARD PUNCH	Ø
PRINTER	Ø
OTHER	Ø

17. ID CODE	18. FILE ID	19. VOLUME NO.	20. I/O	21. MEDIA	22. UNIT	23. RETN	24. SECLAS/ PRIV	25. SOURCE	26. DISPOSITION	27. OPERATOR NOTES
PØ9AUDØ1	BØ2AUD		I	TAPE			U/N	LIBRARY	LIBRARY	
	BØ9AUD		O	TAPE		D365	U/N	SCRATCH	LIBRARY	

28. REMARKS

DA FORM 1 NOV 78 4744

*U.S. Government Printing Office: 1980—310-961/8838

Figure 3.8-01

RUN MESSAGES AND RESPONSES For use of this form, see TB 18-111; the proponent agency is CSA.	1. DATE 811201
2. RUN ID AUDTØ5	3. RUN TITLE CABS CONSOLIDATION

4. MESSAGE DISPLAYED	5. ACTION REQUIRED
CONSOLE MESSAGES:	
SAME AS SYSOUT/SYSLST	
SYSOUT/SYSLST MESSAGES:	
PØ9AUD Ø1 H INVALID SORT	The sort failed for an unknown reason. Determine the cause for the failure, correct and restart the run.
PØ9AUD Ø2 H NO INPUT RCDS	There are no budget data records on the input file. The run is stopped. Notify the CABS analyst.
PØ9AUD 11 H CNTL CARD INVALID	Control card accepted from SYSIN is missing or invalid; correct and restart the run.

6. REMARKS

DA FORM 1 NOV 78 4745

Figure 3.8-01

LOGIC CHART For use of this form, see TB 18-111; the proponent agency is CSA.	1. DATE 811201
2. ID AUDTØ5	3. TITLE CABS CONSOLIDATION

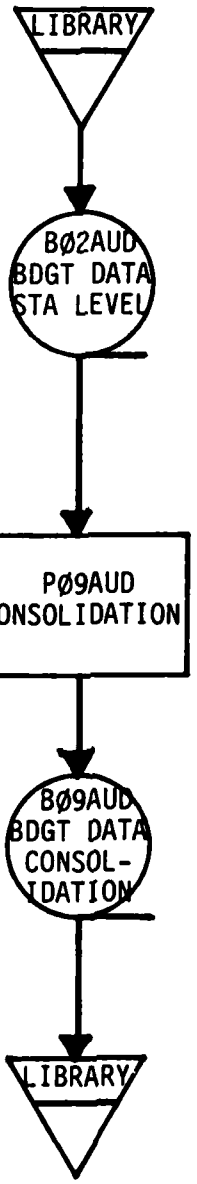

DA FORM 1 NOV 78 4735

Figure 3.8-01

RECOVERY INSTRUCTIONS For use of this form, see TB 18-111; the proponent agency is CSA.	1. DATE 811201
2. RUN ID AUDTØ5	3. RUN TITLE CABS CONSOLIDATION
4. ID CODE	5. RECOVERY INSTRUCTIONS
PØ9AUDØ1	Restart with the original input and JCL setup.
6. REMARKS	

DA FORM 1 NOV 78 4751

Figure 3.8-01

3.9 Run Description AUDTØ6. Reference Figure 3.9-01

INDEX FOR FIGURE 3.9-01

	NAME	PAGE NO.
3.9.1	Control Inputs	
3.9.1.1	Control Cards	3-110 thru 3-114
3.9.1.2	Control Input Statements	NA
3.9.1.2.1	Job Control Statements (PROC)	3-115 thru 3-119
3.9.1.2.2	Job Control Statements (RETRIEVAL)	3-120
3.9.2	Management Information	
3.9.2.1	Run Setup-Console Operating Information	3-121
3.9.2.2	Run Messages and Responses	3-122 thru 3-123
3.9.2.3	Logic Chart	3-124
3.9.3	Input-Output Files	See DA Form 4744 for the I/O File Information
3.9.4	Output Reports	3-125
3.9.5	Reproduced Output Reports	
3.9.5.1	Reproduced Output Reports	NA
3.9.5.2	PCM Processing Instructions	NA
3.9.6	Restart/Recovery Procedures	
3.9.6.1	Recovery Instructions	3-126

CONTROL CARD PREPARATION For use of this form, see TB18-111; the proponent agency is CSA.	1. DATE 811201
2. RUN ID AUDT06	3. RUN TITLE CABS AUTODIN
4. CONTROL CARD ID P1ØAUD-CNTLØ1	5. CONTROL CARD TITLE P1ØAUD-CONTROL CARD
6. CONTROL CARD PURPOSE AND REMARKS To provide program parameter options.	
7. USER INFORMATION, IF REQUIRED Control cards #Ø1 thru Ø6 may be entered in any sequence. Repetitive Fields on cards 3 thru 6 may be entered in any sequence. Only cards 1, 4, and 5 are required to complete a run.	

8. CONTROL CARD INSTRUCTIONS

FIELD a.	POSITION b.	PREPARATION INSTRUCTIONS c.	RESPONSIBLE AGENCY d.
CNTL-ID	1-13	Constant "P1ØAUD-CNTLØ1"	
	14	Blank	
FY	15-16	Fiscal Year	Functional User
	17	Blank	
RPT-TYPE	18-21	Report Type Ex: COB, SOR	Functional User
	22	Blank	
AS-OF-DATE	23-31	As of Date Ex: 31 Oct 81	Functional User
	32	Blank	
OUTPUT	33	Enter "C" or "T" for output media C = Cards T = Tape	Functional User
	34-8Ø	Blank	

DA FORM 1 NOV 78 4743

Figure 3.9-01

CONTROL CARD PREPARATION For use of this form, see TB 18-111; the proponent agency is CSA.	1. DATE 811201
2. RUN ID AUDT06	3. RUN TITLE CABS AUTODIN
4. CONTROL CARD ID P1ØAUD-CNTLØ3	5. CONTROL CARD TITLE P1ØAUD-STATION-SELECT-CARD

6. CONTROL CARD PURPOSE AND REMARKS

To select station codes to be sent via autodin.

7. USER INFORMATION, IF REQUIRED

Enter from 1 to 4 station codes to be selected. If left blank or omitted all station codes will be selected.

8. CONTROL CARD INSTRUCTIONS

FIELD a.	POSITION b.	PREPARATION INSTRUCTIONS c.	RESPONSIBLE AGENCY d.
CNTL-ID	1-13	Constant "P1ØAUD-CNTLØ3"	
	14	Blank	
SELECTED STATION #1	15-17	Station Code #1 Ex: 16 Left Justified	Functional User
	18	Blank	
SELECTED STATION #2	19-21	Station Code #2 Ex: 83 Left Justified	Functional User
	22	Blank	
SELECTED STATION #3	23-25	Station Code #3	Functional User
	26	Blank	
SELECTED	27-29	Station Code #4	Functional User
	3Ø-8Ø	Blank	

DA FORM 1 NOV 78 4743

Figure 3.9-01

CONTROL CARD PREPARATION For use of this form, see TB 18-111; the proponent agency is CSA.	1. DATE 811201
2. RUN ID AUDT06	3. RUN TITLE CABS AUTODIN
4. CONTROL CARD ID P1ØAUD-CNTLØ4	5. CONTROL CARD TITLE P1ØAUD-ROUTING-INDICATOR-CARD

6. CONTROL CARD PURPOSE AND REMARKS

Used to supply program with Autodin Routing Indicators and Command Codes to be selected.

7. USER INFORMATION, IF REQUIRED

8. CONTROL CARD INSTRUCTIONS

FIELD a.	POSITION b.	PREPARATION INSTRUCTIONS c.	RESPONSIBLE AGENCY d.
CNTL-ID	1-13	Constant "P1ØAUD-CNTLØ4"	
	14	Blank	
RIC	15-3Ø		
COMMAND	15-17	Command Code	Functional
#1	18	Precedence	User
	19-25	Routing Indicator Code	
	26	Blank	
	27-3Ø	Content Indicator Code	
	31	Blank	
RIC CMD #2	32-47	Same as #1 (15 thru 3Ø)	Functional User
	48	Blank	
RIC CMD #3	49-64	Same as #1 (15 thru 3Ø)	Functional User
RIC CMD #4	65-8Ø	Same as #1 (15 thru 3Ø)	Functional User

DA FORM 1 NOV 78 4743

Figure 3.9-01

CONTROL CARD PREPARATION
For use of this form, see TB18-111; the proponent agency is CSA.

1. DATE: 811201

2. RUN ID	3. RUN TITLE
AUDT06	CABS AUTODIN
4. CONTROL CARD ID	5. CONTROL CARD TITLE
P1ØAUD-CNTLØ5	P1ØAUD-RSN-SELECT-CARD

6. CONTROL CARD PURPOSE AND REMARKS

Used to select either all RSN's or up to 1Ø selected RSN's.

7. USER INFORMATION, IF REQUIRED

8. CONTROL CARD INSTRUCTIONS

FIELD a.	POSITION b.	PREPARATION INSTRUCTIONS c.	RESPONSIBLE AGENCY d.
CNTL-ID	1-13	Constant "P1ØAUD-CNTLØ5"	
	14	Blank	
COMMENT-CTL	15	"C" or Space C = Ship Comment Records Space = Do Not Ship Comments	Functional User
	16	Blank	
QTR-SEL	17	Select Quarter to be shipped ("A" or Space) "A" = All Quarter Programmed Data Space = Current and Future Quarters Programmed Data	Functional User
	18	Blank	
SOR-PROG DATA-CTL	19	'S' to send only non-blank trans codes; else blank	
	2Ø-21	Blank	
RSN-SEL #1	22-26	RSN #1 to be selected (enter "ALL" to select all RSN's)	Functional User
	27	Blank	
RSN-SEL #2 THRU #1Ø	28-8Ø	Cols 28 thru 8Ø can be used to select up to 9 more RSN's. The format is the same as Col 22-27.	Functional User

DA FORM 1 NOV 78 4743

Figure 3.9-01

CONTROL CARD PREPARATION
For use of this form, see TB 18-111; the proponent agency is CSA.

1. DATE: 811201

2. RUN ID	3. RUN TITLE
AUDT06	CABS AUTODIN
4. CONTROL CARD ID	5. CONTROL CARD TITLE
P1ØAUD-CNTLØ6	P1ØAUD-ITEM-SELECT-CARD

6. CONTROL CARD PURPOSE AND REMARKS

Used to select either "ALL" or up to 1ØØ item numbers.

7. USER INFORMATION, IF REQUIRED

From 1 to 1Ø CNTLØ6 cards may be used on any run. If card is omitted no actual data will be selected.

8. CONTROL CARD INSTRUCTIONS

FIELD a.	POSITION b.	PREPARATION INSTRUCTIONS c.	RESPONSIBLE AGENCY d.
CNTL-ID	1-13	Constant "P1ØAUD-CNTLØ6"	
	14-31	Blank	
ITEM # SELECT ACTUAL DATA	32-35	Enter Item # to be selected or enter 'ALL' to select all Item #'s for current month	Functional User
	36	Blank	
ITEM # 2 THRU 1Ø	37-8Ø	Cols 37 thru 8Ø can be used to select up to 9 additional Item #. Format is the same as Cols 32-36.	Functional User

DA FORM 1 NOV 78 4743

Figure 3.9-01

JOB CONTROL STATEMENT (PROC) - OS

```
//AUDTØ6S1 PROC CYC=COB
//*
//*  ********************************************************************
//*  * THIS PROC PREPARES THE CABS BUDGET DATA FOR AUTODIN
//*  ********************************************************************
//PlØAUDØ1 EXEC PGM=PlØAUD
//IBØ9AUD  DD DSN=AUD.CABS.&CYC..BØ9AUD(Ø),UNIT=TAPE9,DISP=OLD
//IC1ØAUD  DD DUMMY,DCB=BLKSIZE=8Ø
//OB1ØAUD  DD DSN=AUD.CABS.B1ØAUD,UNIT=(TAPE9,,DEFER),
//         DISP=(NEW,KEEP,DELETE),
//         DCB=(RECFM=FS,BLKSIZE=Ø98,LRECL=Ø98),LABEL=RETPD=12Ø
//OD1ØAUD  DD SYSOUT=B,DCB=BLKSIZE=8Ø
//OE1ØAUD  DD SYSOUT=A,DCB=BLKSIZE=133
//WA1ØAUD  DD UNIT=SYSDA,SPACE=(CYL,(4Ø,2),RLSE),
//         DCB=(RECFM=BFS,BLKSIZE=8ØØ,LRECL=8Ø)
//SORTWKØ1 DD UNIT=SYSDA,SPACE=(CYL,2Ø,,CONTIG)
//SORTWKØ2 DD UNIT=SYSDA,SPACE=(CYL,2Ø,,CONTIG)
//SORTWKØ3 DD UNIT=SYSDA,SPACE=(CYL,2Ø,,CONTIG)
//SORTLIB  DD DSN=SYS1.SORTLIB,DISP=SHR
//SYSOUT   DD SYSOUT=A
//SYSUDUMP DD SYSOUT=A
```

Figure 3.9-01

JOB CONTROL STATEMENT CARD DECK LISTING - DOS

```
// JOB AUDTØ6  C1DØR     CABS AUTODIN                      CYC=AOC
*  JOB STEP P1ØAUDØ1
// ASSGN SYSØØ1,X'DK2'              SORTWK
// TLBL IBØ9AUD,'AOC.BØ9AUD'          BUDGET DATA CONSOLIDATED AOC
// TLBL OB1ØAUD,'AOC.B1ØAUD'          OUTPUT AUTODIN FILE AOC
// DLBL WA1ØAUD,'A1ØAUD,D',Ø,SD
// EXTENT SYSØ21,WRK1&P,1,Ø,2Ø,1ØØ,B=1
// DLBL SORTWK1,'J1ØAUD',Ø,SD
// EXTENT SYSØØ1,WRK2&P,1,Ø,2Ø,1ØØ,B=1
// TLBL OY1ØAUD,'Y1ØAUD'            SPOOL OUTPUT
// EXEC TDYNASN
OPEN OY1ØAUD,SYSØ13,OUTPUT
/*
// EXEC P1ØAUD
/*        PLACE P1ØAUD CONTROL CARDS BEFORE THIS CARD
// EXEC TDYNASN
CLOSE OY1ØAUD,SYSØ13,OUTPUT
/*
CLOSE SYSØ13
/*
// DLBL WA1ØAUD,'A1ØAUD'
// EXTENT SYSØ21,WRK1&P,1,Ø,2Ø,1ØØ,B=1
// EXEC ADASD
/*
/&
```

Figure 3.7-01

JOB CONTROL STATEMENT CARD DECK LISTING - DOS (CONTINUED)

```
// JOB AUDTØ6  C1DØR     CABS AUTODIN                          CYC=COB
*  JOB STEP P1ØAUDØ1
// ASSGN SYSØØ1,X'DK2'              SORTWK
// TLBL  IBØ9AUD,'COB.BØ9AUD'         BUDGET DATA CONSOLIDATED COB
// TLBL  OB1ØAUD,'COB.B1ØAUD'         OUTPUT AUTODIN FILE COB
// DLBL  WA1ØAUD,'A1ØAUD,D',Ø,SD
// EXTENT SYSØ21,WRK1&P,1,Ø,2Ø,1ØØ,B=1
// DLBL  SORTWK1,'J1ØAUD',Ø,SD
// EXTENT SYSØØ1,WRK2&P,1,Ø,2Ø,1ØØ,B=1
// TLBL  OY1ØAUD,'Y1ØAUD'           SPOOL OUTPUT
// EXEC TDYNASN
OPEN OY1ØAUD,SYSØ13,OUTPUT
/*
// EXEC P1ØAUD
/*        PLACE P1ØAUD CONTROL CARDS BEFORE THIS CARD
// EXEC TDYNASN
CLOSE OY1ØAUD,SYSØ13,OUTPUT
/*
CLOSE SYSØ13
/*
// DLBL  WA1ØAUD,'A1ØAUD'
// EXTENT SYSØ21,WRK1&P,1,Ø,2Ø,1ØØ,B=1
// EXEC ADASD
/*
/&
```

Figure 3.7-01

JOB CONTROL STATEMENT CARD DECK LISTING - DOS (CONTINUED)

```
// JOB AUDTØ6  C1DØR     CABS AUTODIN                    CYC=OBL
*  JOB STEP P1ØAUDØ1
// ASSGN SYSØØ1,X'DK2'            SORTWK
// TLBL IBØ9AUD,'OBL.BØ9AUD'        BUDGET DATA CONSOLIDATED OBL
// TLBL OB1ØAUD,'OBL.B1ØAUD'        OUTPUT AUTODIN FILE OBL
// DLBL WA1ØAUD,'A1ØAUD,D',Ø,SD
// EXTENT SYSØ21,WRK1&P,1,Ø,2Ø,1ØØ,B=1
// DLBL SORTWK1,'J1ØAUD',Ø,SD
// EXTENT SYSØØ1,WRK2&P,1,Ø,2Ø,1ØØ,B=1
// TLBL OY1ØAUD,'Y1ØAUD'          SPOOL OUTPUT
// EXEC TDYNASN
OPEN OY1ØAUD,SYSØ13,OUTPUT
/*
// EXEC P1ØAUD
/*        PLACE P1ØAUD CONTROL CARDS BEFORE THIS CARD
// EXEC TDYNASN
CLOSE OY1ØAUD,SYSØ13,OUTPUT
/*
CLOSE SYSØ13
/*
// DLBL WA1ØAUD,'A1ØAUD'
// EXTENT SYSØ21,WRK1&P,1,Ø,2Ø,1ØØ,B=1
// EXEC ADASD
/*
/&
```

Figure 3.7-01

JOB CONTROL STATEMENT CARD DECK LISTING - DOS (CONTINUED)

```
// JOB AUDTØ6  C1DØR     CABS AUTODIN                        CYC=SOR
*  JOB STEP P1ØAUDØ1
// ASSGN SYSØØ1,X'DK2'              SORTWK
// TLBL IBØ9AUD,'SOR.BØ9AUD'          BUDGET DATA CONSOLIDATED SOR
// TLBL OB1ØAUD,'SOR.B1ØAUD'          OUTPUT AUTODIN FILE SOR
// DLBL WA1ØAUD,'A1ØAUD,D',Ø,SD
// EXTENT SYSØ21,WRK1&P,1,Ø,2Ø,1ØØ,B=1
// DLBL SORTWK1,'J1ØAUD',Ø,SD
// EXTENT SYSØØ1,WRK2&P,1,Ø,2Ø,1ØØ,B=1
// TLBL OY1ØAUD,'Y1ØAUD'            SPOOL OUTPUT
// EXEC TDYNASN
OPEN OY1ØAUD,SYSØ13,OUTPUT
/*
// EXEC P1ØAUD
/*        PLACE P1ØAUD CONTROL CARDS BEFORE THIS CARD
// EXEC TDYNASN
CLOSE OY1ØAUD,SYSØ13,OUTPUT
/*
CLOSE SYSØ13
/*
// DLBL WA1ØAUD,'A1ØAUD'
// EXTENT SYSØ21,WRK1&P,1,Ø,2Ø,1ØØ,B=1
// EXEC ADASD
/*
/&
```

Figure 3.7-01

JOB CONTROL STATEMENT (RETRIEVAL) - OS

RUN ID: AUDTØ6
RUN NAME: CABS AUTODIN

```
//AUDTØ6 JOB (acconting information)
//AUDTØ6Ø1 EXEC AUDTØ6S1,CYC=XXX        (See Note 1)
//P1ØAUDØ1.IC1ØAUD DD *
/*     INSERT CONTROL CARDS BEFORE THIS CARD
//
```

NOTE 1: On EXEC CARD, substitute for XXX the appropriate value to indicate type of run:

COB, AOC, OBL, SOR

Figure 3.9-01

RUN SETUP—CONSOLE OPERATING INFORMATION
For use of this form, see TB 18-111; the proponent agency is CSA.

1. DATE: 811201

2. RUN ID	3. RUN TITLE	4. SECLAS/PRIV
AUDTØ6	CABS AUTODIN	U/N

6. CORE REQ	7. POINT OF CONTACT	8. RUN AS OF	9. RUN DATE
1ØØK			

10. CONT CD ID	11. DATE/TIME SCH IN	12. DATE/TIME SCH OUT
P1ØAUD-CNTLØ1 - Ø6		

13. SYSTEM	14. RUN NO.	15. EST TIME	16. LANGUAGE
OS/DOS		1Ø MIN	COBOL

5. PERIPHERAL EQUIPMENT

TAPE DRIVES	3
DISK DRIVES	1
CARD READER	1
CARD PUNCH	1
PRINTER	1
OTHER	Ø

17. ID CODE	18. FILE ID	19. VOLUME NO.	20. I/O	21. MEDIA	22. UNIT	23. RETN	24. SECLAS/ PRIV	25. SOURCE	26. DISPOSITION	27. OPERATOR NOTES
P1ØAUDØ1	BØ9AUD		I	TAPE			U/N	LIBRARY	LIBRARY	
	B1ØAUD 1/		O	TAPE		D12Ø	U/N	SCRATCH	TO U42ATP/ U36ATU	
	C1ØAUD		I	CARD	SYSCR/ SYSIPT		U/N	DATA CONTROL	DATA CONTROL	
*	D1ØAUD 1/		O	CARD	SYSCP		U/N	DISK	DATA CONTROL	
*	E1ØAUD		O	DISK	SYSDA		U/N	SCRATCH	SPOOL	
			O	LIST	SYSPR		U/N	DISK	DATA CONTROL	
**	Y1ØAUD		O	TAPE			U/N	SCRATCH	SPOOL	

28. REMARKS

1/ Optional depending on parameter in Control Card.
* OS only.
** DOS only.

DA FORM 1 NOV 78 4744

☆U.S. Government Printing Office: 1980—310-981/8838

Figure 3.9-01

RUN MESSAGES AND RESPONSES For use of this form, see TB 18-111; the proponent agency is CSA.	1. DATE 811201
2. RUN ID AUDTØ6	3. RUN TITLE CABS AUTODIN

4. MESSAGE DISPLAYED		5. ACTION REQUIRED
CONSOLE MESSAGES:		
SAME AS SYSOUT/SYSLST		
SYSOUT/SYSLIST MESSAGES:		
PlØAUD Ø3 H INVALID CONTROL CARD PlØAUD-CNTLØ4		Control card Ø4 is invalid, correct and restart the run.
PlØAUD Ø4 H ERROR IN SPOOL FILE	*	There was a write error on the spool tape, restart the run.
PlØAUD Ø5 H WRONG LENGTH RECORD CARD READER.	*	There was a read error on the card reader. Restart the run.
PlØAUD Ø6 H CTL CD ERR NOT CNTLØ1 THRU CNTLØ6		Control card read was not an Ø1 thru Ø6, correct and restart the run.
PlØAUD Ø7 H MORE THAN 1Ø CNTLØ6 CARDS		There were more than 1Ø CNTLØ6 cards, correct and restart the run.
PlØAUD Ø8 H CNTLØ1 MISSING OR INVALID		Control card Ø1 is missing or invalid, correct and restart the run.
PlØAUD Ø9 H CNTLØ4 MISSING		PlØAUD-CNTLØ4 card is missing; must be present to specify command codes to be selected.

6. REMARKS

*DOS ONLY.

DA FORM 1 NOV 78 4745

Figure 3.9-01

RUN MESSAGES AND RESPONSES For use of this form, see TB 18-111; the proponent agency is CSA.	1. DATE 811201
2. RUN ID AUDTØ6	3. RUN TITLE CABS AUTODIN (CONTINUED)

4. MESSAGE DISPLAYED	5. ACTION REQUIRED
SYSOUT/SYSLIST MESSAGES:	
PlØAUD 1Ø H CNTLØ5 MISSING OR INVALID	Control card Ø5 is missing or invalid, correct and restart the run.
PlØAUD 11 H AS OF DATE MONTH NOT 3 POS ALPHA	As of date month is not an alpha abreviation for month Ex Jan. Feb; correct and restart the run.
PlØAUD 12 H UNSUCCESSFUL SORT BØ9AUD	Sort failed for some reason, determine cause and restart the run.
PlØAUD 13 H NO DATA ON BØ9AUD	Input budget data file has no records.

6. REMARKS

DA FORM 1 NOV 78 4745

Figure 3.9-01

LOGIC CHART
For use of this form, see TB 18-111; the proponent agency is CSA

1. DATE: 811201

2. ID: AUDTØ6

3. TITLE: CABS AUTODIN

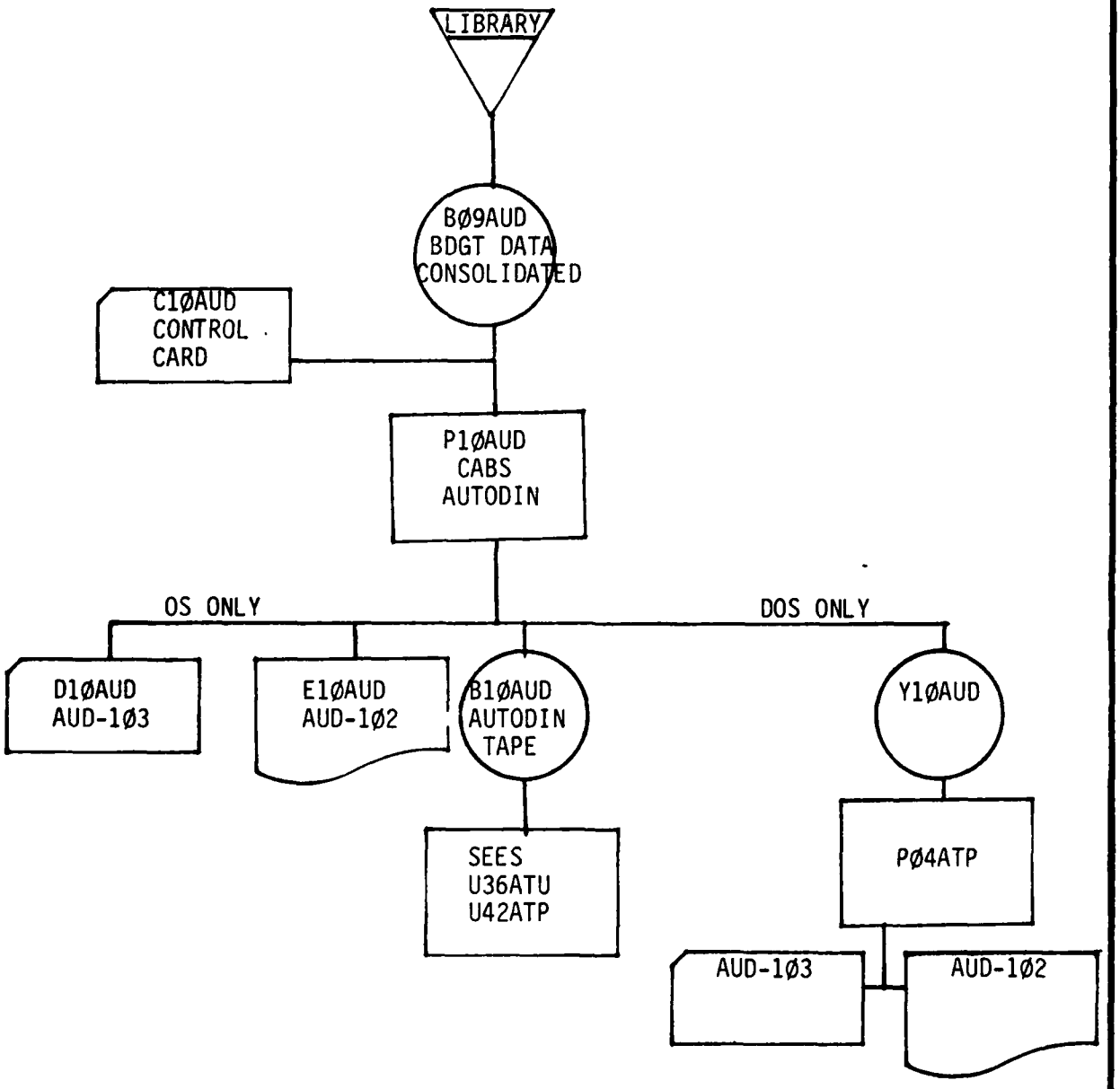

DA FORM 1 NOV 78 4735

Figure 3.9-01

OUTPUT REPORTS

For use of this form, see TB 18-111; the proponent agency is CSA.

1. RUN ID: AUDTØ6

2. DATE: 811201

3. FILE ID	4. MEDIA	5. PCN/RCS	6. SECLAS/ PRIV	7. PRINTER					8. VOLUME	9. REPORT TITLE	10. DISPOSITION
				PAPER a.	NO. OF CYS b.	TAPE c.	PRINT POS d.	LINE UP e.			
E1ØAUD	DISK	AUD-1Ø2	U/N							CABS BUDGET DATA AUTODIN LISTING	PGM/BDGT DIVISION
D1ØAUD	DISK	AUD-1Ø3	U/N							AUTODIN CARDS	PGM/BDGT DIVISION

11. REMARKS

DA FORM 1 NOV 78 4748

Figure 3.9-01

RECOVERY INSTRUCTIONS For use of this form, see TB 18-111; the proponent agency is CSA.	1. DATE 811201
2. RUN ID AUDTØ6	3. RUN TITLE CABS AUTODIN
4. ID CODE	5. RECOVERY INSTRUCTIONS
P1ØAUDØ1	RESTART WITH ORIGINAL INPUT AND JCL SETUP.
6. REMARKS	

DA FORM 1 NOV 78 4751

Figure 3.9-01

3.10 Run Description AUDMØ7. Reference Figure 3.10-01

INDEX FOR FIGURE 3.10-01

	NAME	PAGE NO.
3.10.1	Control Inputs	
3.10.1.1	Control Cards	3-128
3.10.1.2	Control Input Statements	NA
3.10.1.2.1	Job Control Statements (PROC)	3-129 thru 3-130
3.10.1.2.2	Job Control Statements (RETRIEVAL,	3-131
3.10.2	Management Information	
3.10.2.1	Run Setup-Console Operating Information	3-132
3.10.2.2	Run Messages and Responses	3-133
3.10.2.3	Logic Chart	3-134
3.10.3	Input-Output Files	See DA Form 4744 for the I/O File Information
3.10.4	Output Reports	3-135
3.10.5	Reproduced Output Reports	
3.10.5.1	Reproduced Output Reports	NA
3.10.5.2	PCM Processing Instructions	NA
3.10.6	Restart/Recovery Procedures	
3.10.6.1	Recovery Instructions	3-136

CONTROL CARD PREPARATION
For use of this form, see TB18-111, the proponent agency is CSA.

1. DATE: 811201

2. RUN ID: AUDMØ7

3. RUN TITLE: REFORMAT OBLIGATIONS FOR MONTHLY CUMULATIVE OBLIGATION REPORTING

4. CONTROL CARD ID: P11AUD-CNTL

5. CONTROL CARD TITLE: P11AUD-CONTROL-CARD

6. CONTROL CARD PURPOSE AND REMARKS

To provide program parameter options.

7. USER INFORMATION, IF REQUIRED

8. CONTROL CARD INSTRUCTIONS

FIELD a.	POSITION b.	PREPARATION INSTRUCTIONS c.	RESPONSIBLE AGENCY d.
CNTL-ID	1 11	Constant "P11AUD-CNTL"	
	12	Blank	
	13 15	Literal "FY="	
FISCAL-YR	16	Last digit of the fiscal year for the data that is to be processed.	Functional user
	17	Blank	
	18 21	Literal "AH1="	
AH1-RQMT/ B14-RQMT	22	"Y" if the ANC.CINFARS.AH1ANC (MACOM) or the B14AUD (INSTL) tape file is to be used as input; otherwise "N" or blank.	Functional user
	23 24	Blank	
LEVEL	25	"M" for MACOM level run; "I" for installation level.	Functional user
	26	Blank	
CMD-CODE #1	27 29	3-digit command code. (The last 2 digits are used to select input records by operating agency; the 3-digit code will appear in output budget data records.)	Functional user
	3Ø	Blank	
	31-45	Up to 4 additional command codes, separated by spaces (like columns 27-3Ø).	
	46-8Ø	Blank	

DA FORM 1 NOV 78 4743

Figure 3.10-01

JOB CONTROL STATEMENT (PROC) - OS

```
//AUDMØ7S1 PROC CYC=OBL
//*
//*  ************************************************************
//*  *  THIS PROC PERFORMS THE REFORMAT CUMULATIVE OBLIGATION  *
//*  *  DATA FOR CABS REPORTING.                                *
//*  ************************************************************
//*
//P11AUDØ1 EXEC PGM=P11AUD
//ICM2ANC  DD DSN=ANC.CINFARS.CM2ANC(Ø),UNIT=TAPE9,
//         DISP=(OLD,KEEP),DCB=(RECFM=BFS,BLKSIZE=81Ø,LRECL=81)
//IAH1ANC  DD DSN=ANC.CINFARS.AH1ANC(Ø),UNIT=TAPE9,
//         DISP=(OLD,KEEP),DCB=(RECFM=BFS,BLKSIZE=8ØØ,LRECL=8Ø)
//IAØAAUD  DD DSN=AUD.CABS.&CYC..AØAAUD(Ø),UNIT=TAPE9,DISP=(OLD,KEEP)
//OBØ2AUD  DD DSN=AUD.CABS.&CYC..BØ2AUD(+1),UNIT=TAPE9,
//         DISP=(,CATLG,DELETE),
//         DCB=(RECFM=BFS,BLKSIZE=8ØØ,LRECL=8Ø),
//         LABEL=RETPD=12Ø
//OB11AUD  DD SYSOUT=A,DCB=BLKSIZE=133
//WC11AUD  DD UNIT=SYSDA,SPACE=(CYL,(3Ø,2),RLSE),
//         DCB=(RECFM=BFS,BLKSIZE=8ØØ,LRECL=8Ø)
//SORTLIB  DD DSN=SYS1.SORTLIB,DISP=SHR
//SORTWKØ1 DD UNIT=SYSDA,SPACE=(CYL,15,,CONTIG)
//SORTWKØ2 DD UNIT=SYSDA,SPACE=(CYL,15,,CONTIG)
//SORTWKØ3 DD UNIT=SYSDA,SPACE=(CYL,15,,CONTIG)
//SYSOUT   DD SYSOUT=A
//SYSUDUMP DD SYSOUT=A
//IA11AUD  DD DUMMY,DCB=BLKSIZE=8Ø
```

Figure 3.10-01

JOB CONTROL STATEMENT CARD DECK LISTING - DOS

```
// JOB AUDMØ7 C1DØR          CABS CINFARS EXTRACT          CYC=OBL
*  JOB STEP P11AUDØ1
// ASSGN SYSØØ1,X'DK2'
// TLBL ICM2ANC,'B14AUD'   MACOM WOULD BE 'CM2ANC'
// TLBL IAH1ANC,'AH1ANC'
// TLBL IAØAAUD,'OBL.AØAAUD'        CONTROL FILE, OBL
// TLBL OBØ2AUD,'OBL.BØ2AUD'        CABS CINFARS EXTRACT OBL
// DLBL OB11AUD,'B11AUD,D'     PRINTFILE
// EXTENT SYSØ21,WRK1&P,1,Ø,2Ø,1,B=1
// DLBL SORTWK1,'EØ7AUD',Ø,SD
// EXTENT SYSØØ1,WRK2&P,1,Ø,2Ø,1ØØ,B=1
// DLBL WC11AUD,'C11AUD,D'
// EXTENT SYSØ21,WRK1&P,1,Ø,2Ø,1,B=1
// TLBL OY11AUD,'Y11AUD'        SPOOL OUTPUT
// EXEC TDYNASN
OPEN OY11AUD,SYSØ13,OUTPUT
/*
// EXEC P11AUD
P11AUD-CNTL  (user control card options)
             (PRIME card deck input)
/*
// EXEC TDYNASN
CLOSE OY11AUD,SYSØ13,OUTPUT
/*
CLOSE SYSØ13
/*
// DLBL OB11AUD,'B11AUD'
// EXTENT SYSØ21,WRK1&P,1,Ø,2Ø,1,B=1
// EXEC ADASD
/&
```

Figure 3.10-01

JOB CONTROL STATEMENT (RETRIEVAL) - OS

RUN ID: AUDMØ7
RUN NAME: REFORMAT CUMULATIVE OBLIGATION DATA FOR CABS REPORTING

```
//AUDMØ7   JOB (accounting information)
//AUDMØ7Ø1 EXEC AUDMØ7S1,CYC=OBL
//P11AUDØ1.IA11AUD DD *
P11AUD-CNTL          (user control card options)
                     (PRIME card deck input)
/* INSERT P11AUD-CNTL CARD AND ANY PRIME CARD INPUT BEFORE THIS CARD.
//
```

Figure 3.10-01

RUN SETUP—CONSOLE OPERATING INFORMATION

For use of this form, see TB 18-111; the proponent agency is CSA.

1. DATE			
811201			

2. RUN ID	3. RUN TITLE	4. SECLAS/PRIV	5. PERIPHERAL EQUIPMENT
AUDM07	REFORMAT OBLIGATIONS FOR MONTHLY CUMULATIVE OBLIGATION REPORTING	U/N	TAPE DRIVES 3

6. CORE REQ	7. POINT OF CONTACT	8. RUN AS OF	9. RUN DATE	
59K				DISK DRIVES 1
				CARD READER 1
				CARD PUNCH 0
				PRINTER 1
				OTHER 0

10. CONT CD ID	11. DATE/TIME SCH IN	12. DATE/TIME SCH OUT
P11AUD-CNTL		

13. SYSTEM	14. RUN NO.	15. EST TIME	16. LANGUAGE
OS/DOS		10 MIN.	COBOL

17. ID CODE	18. FILE ID	19. VOLUME NO.	20. I/O	21. MEDIA	22. UNIT	23. RETN	24. SECLAS/ PRIV	25. SOURCE	26. DISPOSITION	27. OPERATOR NOTES
P11AUD01	AH1ANC 1/		I	TAPE			U/N	LIBRARY	LIBRARY	
	AØAAUD		I	TAPE			U/N	LIBRARY	LIBRARY	
	A11AUD 2/		I	CARD	SYSCR		U/N	DATA CONTROL	DATA CONTROL	
	B14AUD 2/		I	TAPE			U/N	LIBRARY	LIBRARY	
	CM2ANC 2/		I	TAPE			U/N	LIBRARY	LIBRARY	
	BØ2AUD		O	TAPE		D120	U/N	SCRATCH	LIBRARY	
	B11AUD	*	O	DISK	SYSDA		U/N	SCRATCH	SPOOL	
	Y11AUD	**	O	TAPE			U/N	SCRATCH	SPOOL	
			O	LIST	SYSPR		U/N	DISK	DATA CONTROL	

28. REMARKS

1/ Optional
* OS only.
** DOS only.

2/ Input may be tape CM2ANC (available at MACOM level) or B14AUD (at installation level) and/or card (PRIME deck).

DA FORM 1 NOV 78 4744

*U.S. Government Printing Office: 1980—310-981/8830

Figure 3.10-01

RUN MESSAGES AND RESPONSES For use of this form, see TB 18-111; the proponent agency is CSA.		1. DATE 811201
2. RUN ID AUDMØ7	3. RUN TITLE REFORMAT OBLIGATIONS FOR MONTHLY CUMULATIVE OBLIGATION REPORTING	
4. MESSAGE DISPLAYED	5. ACTION REQUIRED	
CONSOLE MESSAGES: SAME AS SYSOUT/SYSLST SYSOUT/SYSLST MESSAGES: P11AUD Ø3 H NO CINFARS RCDS WERE SELECTED P11AUD Ø4 H INVALID SORT P11AUD 11 H CTL CARD ERROR	 No input records met the selection criteria. Notify the CABS analyst. The sort failed for an unknown reason Determine the cause for the failure, correct and restart the run. First input card must be a valid P11AUD-CNTL card. Correct or insert control card and restart the run.	
6. REMARKS		

DA FORM 1 NOV 78 4745

Figure 3.10-01

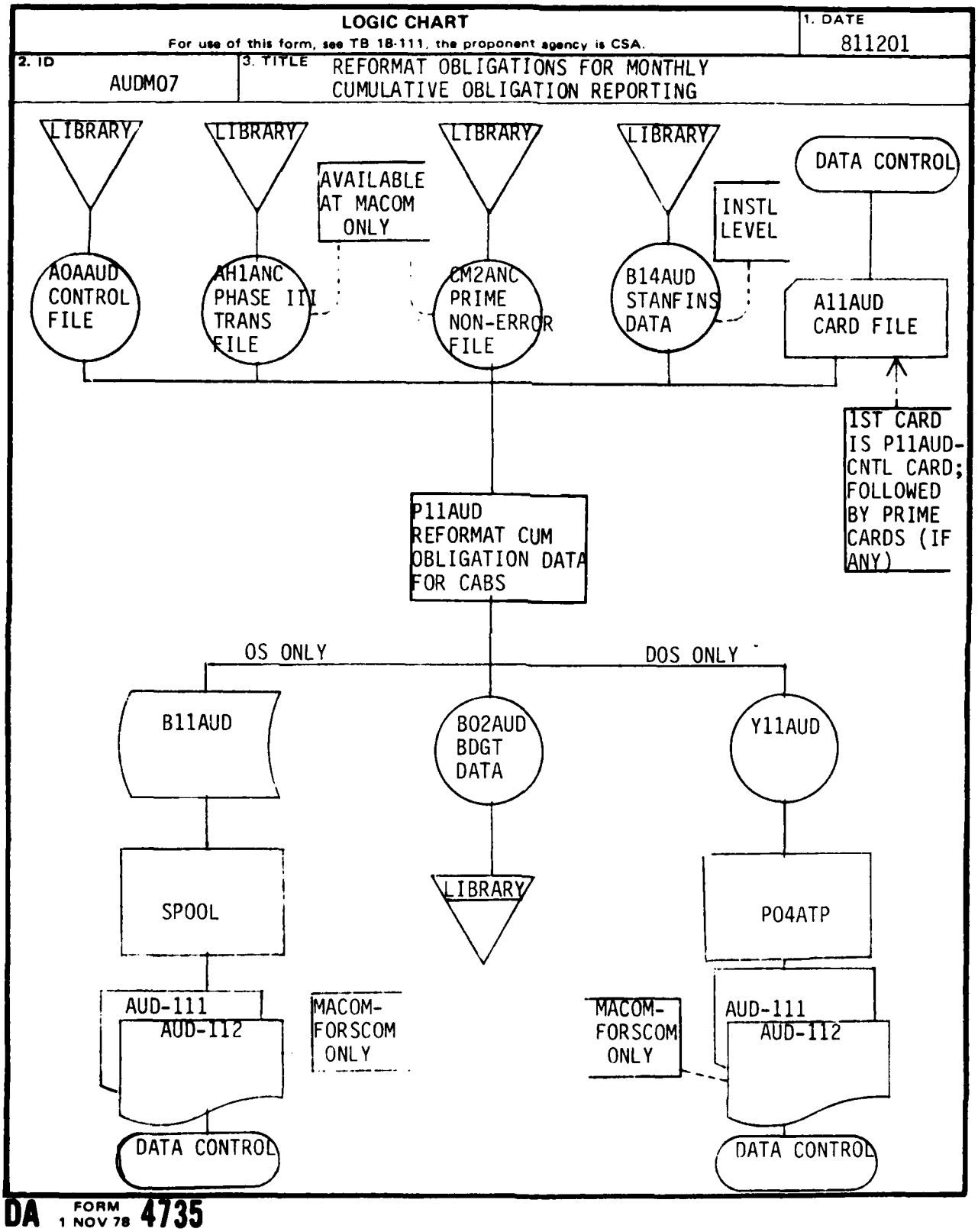

DA FORM 1 NOV 78 4735

Figure 3.10-01

OUTPUT REPORTS

For use of this form, see TB 18-111; the proponent agency is CSA.

1. RUN ID: AUDMØ7

2. DATE: 811201

3. FILE ID	4. MEDIA	5. PCN/RCS	6. SECLAS/ PRIV	7. PRINTER					8. VOLUME	9. REPORT TITLE	10. DISPOSITION
				PAPER a.	NO. OF CYS b.	TAPE c.	PRINT POS d.	LINE UP e.			
A11AUD	CARD		U/N							P11AUD-CNTL CARD AND PRIME CARD INPUT	PGM/BUDGET DIVISION
B11AUD	DISK	AUD-111	U/N							RECORD COUNTS AND MESSAGES	PGM/BUDGET DIVISION
B11AUD	DISK	AUD112 1/	U/N							COST FACTOR REPORT	PGM/BUDGET DIVISION

11. REMARKS

1/ Produced for FORSCOM only.

DA FORM 1 NOV 78 4748

Figure 3.10-01

RECOVERY INSTRUCTIONS For use of this form, see TB 18-111; the proponent agency is CSA.	1. DATE 811201
2. RUN ID AUDMØ7	3. RUN TITLE REFORMAT OBLIGATIONS FOR MONTHLY CUMULATIVE OBLIGATION REPORTING
4. ID CODE	5. RECOVERY INSTRUCTIONS
P11AUDØ1	Restart with the original input and JCL setup.
6. REMARKS	

DA FORM 1 NOV 78 4751

Figure 3.10-01

3.11 Run Description AUDM15. Reference Figure 3.11-01

INDEX FOR FIGURE 3.11-01

	NAME	PAGE NO.
3.11.1	Control Inputs	
3.11.1.1	Control Cards	3-138 thru 3-139
3.11.1.2	Control Input Statements	NA
3.11.1.2.1	Job Control Statements (PROC)	3-140 thru 3-141
3.11.1.2.2	Job Control Statements (RETRIEVAL)	3-142
3.11.2	Management Information	
3.11.2.1	Run Setup-Console Operating Information	3-143
3.11.2.2	Run Messages and Responses	3-144
3.11.2.3	Logic Chart	3-145
3.11.3	Input-Output Files	See DA Form 4744 for I/O File Information
3.11.4	Output Reports	NA
3.11.5	Reproduced Output Reports	
3.11.5.1	Reproduced Output Reports	NA
3.11.5.2	PCM Processing Instructions	NA
3.11.6	Restart/Recovery Procedures	
3.11.6.1	Recovery Instructions	3-146

CONTROL CARD PREPARATION For use of this form, see TB 18-111, the proponent agency is CSA.	1. DATE 811201
2. RUN ID AUDM15	3. RUN TITLE REFORMAT OBLIGATION DATA FOR SOR REPORTS
4. CONTROL CARD ID P15AUD-CNTL	5. CONTROL CARD TITLE P15AUD-CONTROL CARD
6. CONTROL CARD PURPOSE AND REMARKS To Provide program parameter options.	
7. USER INFORMATION, IF REQUIRED	

8. CONTROL CARD INSTRUCTIONS

FIELD a.	POSITION b.	PREPARATION INSTRUCTIONS c.	RESPONSIBLE AGENCY d.
CNTL-ID	1-11	Constant "P15AUD-CNTL"	
	12	Blank	
	13-15	Literal "FY="	
FISCAL-YR	16	Last digit of the fiscal year for the data that is to be present	Functional User
	17	Blank	
	18-21	Literal "AOM="	
AS-OF-MO	22-23	2-Digit AS-OF-MONTH	Functional User
	24	Blank	
LEVEL	25	"M" for MACOM level run (to use input tape CM2ANC from CINFARS); else leave blank	Functional User
	26	Blank	

DA FORM 1 NOV 78 4743

Figure 3.11-01

CONTROL CARD PREPARATION *(CONTINUATION)*
For use of this form, see TB 18-111; the proponent agency is CSA.

1. DATE: 811201

2. RUN ID: AUDM15

3. CONTROL CARD ID *(See Block 4, DA Form 4743)*: P15AUD-CNTL

4. CONTROL CARD INSTRUCTIONS *(See Block 8, DA Form 4743)*

FIELD *a.*	POSITION *b.*	PREPARATION INSTRUCTIONS *c.*	RESPONSIBLE AGENCY *d.*
CMD-RSN1	27-34	3-digit command code followed by 5-character RSN to be used in command code and RSN fields of output budget data records.	Functional User
	35	Blank	
CMD-RSN2	36-44	Additional command code/RSN fields corresponding to positions 27-35. If not needed leave blank.	Functional User
3	45-53		
4	54-62		
5	63-71		
	72-8Ø	Blank	

DA FORM 1 NOV 78 4743-1

Figure 3.11-01

JOB CONTROL STATEMENT (PROC) - OS

```
//AUDM15S1 PROC
//*
//*  ********************************************************************
//*  *  THIS PROC EXTRACTS ACTUAL CSCFA-218 DATA FOR INPUT TO CABS    *
//*  ********************************************************************
//*
//P15AUDØ1 EXEC PGM=P15AUD
//IAØAAUD  DD DSN=AUD.CABS.SOR.AØAAUD(Ø),UNIT=TAPE9,DISP=(OLD,KEEP)
//ICM2ANC  DD DSN=ANC.CINFARS.CM2ANC(Ø),UNIT=TAPE9,
//         DISP=(OLD,KEEP),DCB=(RECFM=BFS,BLKSIZE=81Ø,LRECL=81)
//OB15AUD  DD DSN=AUD.CABS.SOR.AØ2AUD,UNIT=TAPE9,DISP=(,KEEP,DELETE),
//         DCB=(RECFM=BFS,BLKSIZE=8ØØ,LRECL=8Ø),LABEL=RETPD=45
//WC15AUD  DD UNIT=SYSDA,SPACE=(CYL,(3Ø,2),RLSE),
//         DCB=(RECFM=BFS,BLKSIZE=8ØØ,LRECL=8Ø)
//SORTLIB  DD DSN=SYS1,SORTLIB,DISP=SHR
//SORTWKØ1 DD UNIT=SYSDA,SPACE=(CYL,15,,CONTIG)
//SORTWKØ2 DD UNIT=SYSDA,SPACE=(CYL,15,,CONTIG)
//SORTWKØ3 DD UNIT=SYSDA,SPACE=(CYL,15,,CONTIG)
//SYSOUT   DD SYSOUT=A
//SYSUDUMP DD SYSOUT=A
//IA15AUD  DD DUMMY,DCB=BLKSIZE=8Ø
```

Figure 3.11-01

JOB CONTROL STATEMENT CARD DECK LISTING - DOS

```
// JOB AUDM15 C1DØR  REFORMAT ACTUAL CSCFA-218 DATA FOR SOR REPORTING  CYC=SOR
*  JOB STEP P15AUDØ1
// ASSGN SYSØ14,X'CRØ'
// ASSGN SYSØØ1,X'DK2'
// TLBL  IAØAAUD,'SOR.AØAAUD'    CABS CONTROL FILE SOR
// TLBL  ICM2ANC,'B14AUD'   MACOM WOULD BE 'CM2ANC'
// TLBL  OB15AUD,'SOR.AØ2AUD'    OUTPUT BUDGET DATA TRANS SOR
// DLBL  WC15AUD,'C15AUD,D',Ø,SD
// EXTENT SYSØ21,WRK1&P,1,Ø,2Ø,5ØØ,B=1
// DLBL SORTWK1,'J15AUD'
// EXTENT SYSØØ1,WRK2&P,1,Ø,2Ø,5ØØ,B=1
// EXEC P15AUD
P15AUD-CNTL      (OPTIONS)
/*         INSERT ANY CSCFA-218 CARD RECORDS BEFORE THIS CARD
/&
```

Figure 3.11-01

JOB CONTROL STATEMENT (RETRIEVAL) - OS

```
RUN  ID:  AUDM15
RUN NAME:  REFORMAT ACTUAL CSCFA-218 DATA FOR SOR REPORTING

//AUDM15    JOB (accounting information)
//AUDM15Ø1  EXEC AUDM15S1
//P15AUDØ1.IA15AUD DD *
P15AUD-CNTL          (user control card options)

/*      INSERT ANY CSCFA-218 CARD RECORDS BEFORE THIS CARD
//
```

Figure 3.11-01

RUN SETUP--CONSOLE OPERATING INFORMATION

For use of this form, see TB 18-111; the proponent agency is CSA.

1. DATE: 811201

2. RUN ID	3. RUN TITLE	4. SECLAS/PRIV
AUDM15	REFORMAT OBLIGATION DATA FOR SOR REPORTS	U/N

6. CORE REQ	7. POINT OF CONTACT	8. RUN AS OF	9. RUN DATE
98K			

10. CONT CD ID	11. DATE/TIME SCH IN	12. DATE/TIME SCH OUT
P15AUD-CNTL		

13. SYSTEM	14. RUN NO.	15. EST TIME	16. LANGUAGE
OS/DOS		1Ø MIN.	COBOL

5. PERIPHERAL EQUIPMENT

TAPE DRIVES	3
DISK DRIVES	2
CARD READER	1
CARD PUNCH	Ø
PRINTER	1
OTHER	Ø

17. ID CODE	18. FILE ID	19. VOLUME NO.	20. I/O	21. MEDIA	22. UNIT	23. RETN	24. SECLAS/ PRIV	25. SOURCE	26. DISPOSITION	27. OPERATOR NOTES
P15AUD	AØAAUD		I	TAPE			U/N	LIBRARY	LIBRARY	
	B14AUD 1/		I	TAPE			U/N	LIBRARY	LIBRARY	
	CM2ANC 1/		I	TAPE			U/N	LIBRARY	LIBRARY	
	A15AUD 1/		I	CARD	SYSCR/ SYSIPT		U/N	DATA CONTROL	DATA CONTROL	
	AØ2AUD		O	TAPE			U/N	SCRATCH	LIBRARY	

28. REMARKS

1/ Input may be tape CM2ANC (available at MACOM level) or B14AUD (at installation level) and/or card (PRIME deck).

DA FORM 1 NOV 78 4744

☆U.S. Government Printing Office: 1980—310-981/8838

RUN MESSAGES AND RESPONSES For use of this form, see TB 18-111; the proponent agency is CSA.	1. DATE 811201
2. RUN ID AUDM15	3. RUN TITLE REFORMAT OBLIGATION DATA FOR SOR REPORTS

4. MESSAGE DISPLAYED	5. ACTION REQUIRED
CONSOLE MESSAGES:	
SAME AS SYSOUT/SYSLST	
SYSOUT/SYSLST MESSAGES:	
P15AUD Ø3 H NO CINFARS RCDS WERE SELECTED	Inform functional analyst.
P15AUD Ø4 H INVALID SORT	Attempt to determine cause; restart run at the beginning.
P15AUD 11 H CTL CARD ERROR	Insure that control card is valid and place as 1st card in input card stream; then restart run at the beginning.

6. REMARKS

DA FORM 1 NOV 78 4745

Figure 3.11-01

LOGIC CHART
For use of this form, see TB 18-111; the proponent agency is CSA.

1. DATE: 811201

2. ID: AUDM15

3. TITLE: REFORMAT OBLIGATION DATA FOR SOR REPORTS

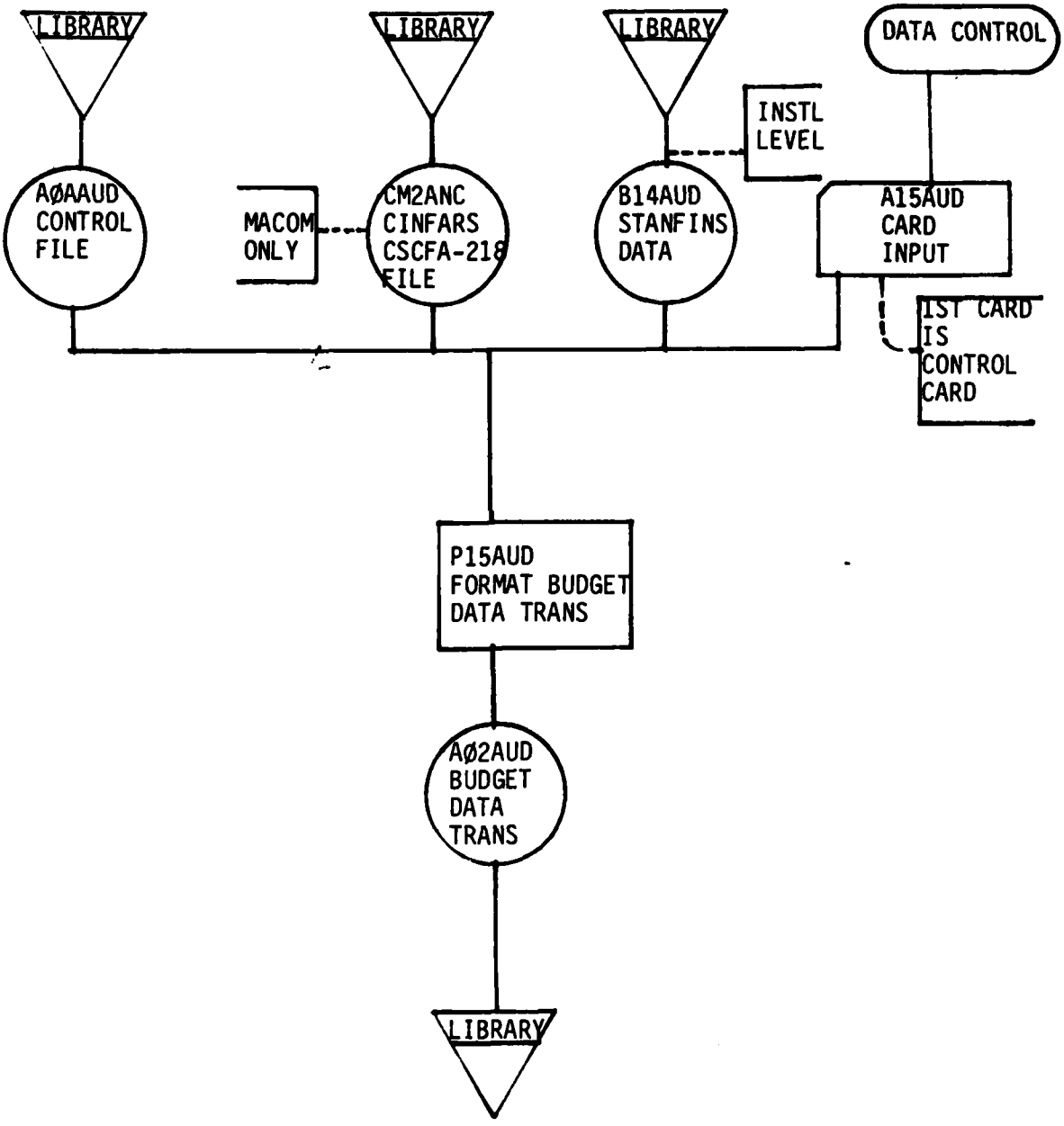

DA FORM 1 NOV 78 4735

Figure 3.11-01

RECOVERY INSTRUCTIONS For use of this form, see TB 18-111; the proponent agency is CSA.	1. DATE 811201
2. RUN ID AUDM15	3. RUN TITLE REFORMAT OBLIGATION DATA FOR SOR REPORTS
4. ID CODE	5. RECOVERY INSTRUCTIONS
P15AUDØ1	Restart with the original input and JCL setup.
6. REMARKS	

DA FORM 1 NOV 78 4751

Figure 3.11-01

3.12 Run Description AUDM2Ø. Reference Figure 3.12-01

INDEX FOR FIGURE 3.12-01

	NAME	PAGE NO.
3.12.1	Control Inputs	
3.12.1.1	Control Cards	3-148 thru 3-149
3.12.1.2	Control Input Statements	NA
3.12.1.2.1	Job Control Statements (PROC)	3-154 thru 3-156
3.12.1.2.2	Job Control Statements (RETRIEVAL)	3-159
3.12.2	Management Information	
3.12.2.1	Run Setup-Console Operating Information	3-160
3.12.2.2	Run Messages and Responses	3-163 thru 3-164
3.12.2.3	Logic Chart	3-167 thru 3-168
3.12.3	Input-Output Files	See DA Form 4744 for the I/O File Information
3.12.4	Output Reports	3-169
3.12.5	Reproduced Output Reports	
3.12.5.1	Reproduced Output Reports	NA
3.12.5.2	PCM Processing Instructions	NA
3.12.6	Restart/Recovery Procedures	
3.12.6.1	Recovery Instructions	3-170

CONTROL CARD PREPARATION For use of this form, see TB 18-111; the proponent agency is CSA.	1. DATE 811201
2. RUN ID AUDM2Ø	3. RUN TITLE CABS STATUS OF OPERATING RESOURCES
4. CONTROL CARD ID P2ØAUD-CNTL	5. CONTROL CARD TITLE P2ØAUD-CONTROL-CARD
6. CONTROL CARD PURPOSE AND REMARKS To Provide Program Parameter Options.	
7. USER INFORMATION, IF REQUIRED	

8. CONTROL CARD INSTRUCTIONS

FIELD a.	POSITION b.	PREPARATION INSTRUCTIONS c.	RESPONSIBLE AGENCY d.
CNTL-ID	1 11	Constant "P2ØAUD-CNTL"	
	12	Blank	
P2Ø-CNTL	13	Execute program P2ØAUD - "Y" or "N" (yes or no) "Y" = create a new (A2ØAUD) to produce the SOR Reports; "N" = use the Data File previously created.	Functional User
	14	Blank	
P21-CNTL	15	Execute program P21AUD - "Y" or "N" (Status of Operating Resources Report)	Functional User
	16	Blank	
P23-CNTL	17	Execute program P23AUD - "Y" or "N" (Deviation Analysis Report)	Functional User
	18	Blank	
P25-CNTL	19	Execute program P25AUD - "Y" or "N" (Workload Analysis Report)	Functional User

DA FORM 1 NOV 78 4743

Figure 3.12-01

CONTROL CARD PREPARATION *(CONTINUATION)*
For use of this form, see TB 18-111; the proponent agency is CSA.

1. DATE: 811201

2. RUN ID: AUDM2Ø

3. CONTROL CARD ID *(See Block 4, DA Form 4743)*: P2ØAUD-CNTL

4. CONTROL CARD INSTRUCTIONS *(See Block 8, DA Form 4743)*

FIELD a.	POSITION b.	PREPARATION INSTRUCTIONS c.	RESPONSIBLE AGENCY d.
	2Ø	Blank	
P27-CNTL	21	Execute program P27AUD - "Y" or "N" (Average Salary Report)	Functional User
	22-24	Blank	
LEVEL	25	"C" or "I" - "C" for MACOM level run "I" for Installation level	Functional User
	26	Blank	
	27 34	As of date	Functional User
	27 28	Day - 2 digit numeric	
	29	Blank	
	3Ø 31	Month - 2 digit numeric	
	32	Blank	
	33 34	Year - 2 digit numeric	
	35 8Ø	Blank	

DA FORM 1 NOV 78 4743-1

Figure 3.12-01

JOB CONTROL STATEMENT (PROC) - OS

```
//AUDM2ØS1 PROC CYC=SOR,SS1SORT=4Ø
//*
//* ************************************************************************
//* *THIS PROC PREPARES THE CABS STATUS OF OPERATING RESOURCES REPORT   *
//* ************************************************************************
//P2ØAUDØ1 EXEC PGM=P2ØAUD
//SYSIN    DD  DUMMY
//IAØAAUD  DD  DSN=AUD.CABS.&CYC..AØAAUD(Ø),UNIT=TAPE9,DISP=(OLD,KEEP)
//OAØAAUD  DD  DSN=AUD.CABS.AØAAUD,UNIT=SYSDA,SPACE=(CYL,(5,5),RLSE),
//         DCB=(RECFM=BFS,BLKSIZE=12ØØ,LRECL=12Ø),
//         DISP=(NEW,PASS,DELETE)
//IAØ1AUD  DD  DSN=AUD.CABS.&CYC..AØ1AUD(Ø),UNIT=TAPE9,DISP=(OLD,KEEP)
//IAØ7AUD  DD  DSN=AUD.CABS.&CYC..AØ7AUD(Ø),DISP=(OLD,KEEP),
//         UNIT=(TAPE9,,DEFER)
//OA2ØAUD  DD  DSN=AUD.CABS.A2ØAUD,UNIT=(TAPE9,,DEFER),
//         DISP=(NEW,PASS,DELETE),
//         DCB=(RECFM=BFS,BLKSIZE=28ØØ,LRECL=14Ø),LABEL=RETPD=3Ø
//OE2ØAUD  DD  DSN=AUD.CABS.E2ØAUD,SPACE=(8Ø,1),UNIT=SYSDA,
//         DCB=(RECFM=BFS,BLKSIZE=8Ø,LRECL=8Ø),DISP=(NEW,PASS,DELETE)
//SORTLIB  DD DSN=SYS1.SORTLIB,DISP=SHR
//SORTWKØ1 DD UNIT=SYSDA,SPACE=(CYL,1Ø,,CONTIG)
//SORTWKØ2 DD UNIT=SYSDA,SPACE=(CYL,1Ø,,CONTIG)
//SORTWKØ3 DD UNIT=SYSDA,SPACE=(CYL,1Ø,,CONTIG)
//SYSOUT   DD  SYSOUT=A
//SYSUDUMP DD  SYSOUT=A
//P21AUDØ2 EXEC PGM=P21AUD
//IAØAAUD  DD  DSN=AUD.CABS.AØAAUD,UNIT=SYSDA,DISP=(OLD,PASS)
//IA2ØAUD  DD  DSN=AUD.CABS.A2ØAUD,UNIT=TAPE9,DISP=(OLD,PASS)
//IE2ØAUD  DD  DSN=AUD.CABS.E2ØAUD,UNIT=SYSDA,DISP=(OLD,PASS)
//OC21AUD  DD  DSN=AUD.CABS.C21AUD,UNIT=(TAPE9,,DEFER),DISP=(NEW,KEEP),
//         VOL=(,,,16),DCB=(RECFM=BFS,BLKSIZE=133Ø,LRECL=133),
//         LABEL=RETPD=7
//WB21AUD  DD  UNIT=SYSDA,SPACE=(CYL,(14Ø,5),RLSE),
//         DCB=(RECFM=BFS,BLKSIZE=14ØØ,LRECL=14Ø)
//SORTLIB  DD DSN=SYS1.SORTLIB,DISP=SHR
//SORTWKØ1 DD UNIT=SYSDA,SPACE=(CYL,&SS1SORT,,CONTIG)
//SORTWKØ2 DD UNIT=SYSDA,SPACE=(CYL,&SS1SORT,,CONTIG)
//SORTWKØ3 DD UNIT=SYSDA,SPACE=(CYL,&SS1SORT,,CONTIG)
//SORTWKØ4 DD UNIT=SYSDA,SPACE=(CYL,&SS1SORT,,CONTIG)
//SORTWKØ5 DD UNIT=SYSDA,SPACE=(CYL,&SS1SORT,,CONTIG)
//SORTWKØ6 DD UNIT=SYSDA,SPACE=(CYL,&SS1SORT,,CONTIG)
//SYSOUT   DD  SYSOUT=A
//SYSUDUMP DD  SYSOUT=A
```

Figure 3.12-01

JOB CONTROL STATEMENT (PROC) - OS

```
//P23AUDØ3 EXEC PGM=P23AUD
//IAØAAUD  DD  DSN=AUD.CABS.AØAAUD,UNIT=SYSDA,DISP=(OLD,PASS)
//IA2ØAUD  DD  DSN=AUD.CABS.A2ØAUD,UNIT=TAPE9,DISP=(OLD,PASS)
//IE2ØAUD  DD  DSN=AUD.CABS.E2ØAUD,UNIT=SYSDA,DISP=(OLD,PASS)
//OC23AUD  DD  DSN=AUD.CABS.C23AUD,UNIT=(TAPE9,,DEFER),DISP=(NEW,KEEP),
//           VOL=(,,,16),DCB=(RECFM=BFS,BLKSIZE=133Ø,LRECL=133),
//           LABEL=RETPD=7
//WW23AUD  DD DSN=AUD.WORKTAPE,UNIT=(TAPE9,,DEFER),DISP=(NEW,DELETE),
//           VOL=(,,,16),LABEL=RETPD=Ø,
//           DCB=(RECFM=BFS,BLKSIZE=28ØØ,LRECL=14Ø)
//SORTLIB  DD DSN=SYS1.SORTLIB,DISP=SHR
//SORTWKØ1 DD UNIT=SYSDA,SPACE=(CYL,&SS1SORT,,CONTIG)
//SORTWKØ2 DD UNIT=SYSDA,SPACE=(CYL,&SS1SORT,,CONTIG)
//SORTWKØ3 DD UNIT=SYSDA,SPACE=(CYL,&SS1SORT,,CONTIG)
//SORTWKØ4 DD UNIT=SYSDA,SPACE=(CYL,&SS1SORT,,CONTIG)
//SORTWKØ5 DD UNIT=SYSDA,SPACE=(CYL,&SS1SORT,,CONTIG)
//SORTWKØ6 DD UNIT=SYSDA,SPACE=(CYL,&SS1SORT,,CONTIG)
//SYSOUT   DD  SYSOUT=A
//SYSUDUMP DD  SYSOUT=A
//P25AUDØ4 EXEC PGM=P25AUD
//IAØAAUD  DD  DSN=AUD.CABS.AØAAUD,UNIT=SYSDA,DISP=(OLD,PASS)
//IA2ØAUD  DD  DSN=AUD.CABS.A2ØAUD,UNIT=TAPE9,DISP=(OLD,PASS)
//IE2ØAUD  DD  DSN=AUD.CABS.E2ØAUD,UNIT=SYSDA,DISP=(OLD,PASS)
//OC25AUD  DD  DSN=AUD.CABS.C25AUD,UNIT=(TAPE9,,DEFER),DISP=(NEW,KEEP),
//           VOL=(,,,16),DCB=(RECFM=BFS,BLKSIZE=133Ø,LRECL=133),
//           LABEL=RETPD=7
//WW25AUD  DD DSN=AUD.WORKTAPE,UNIT=(TAPE9,,DEFER),DISP=(NEW,DELETE),
//           VOL=(,,,16),LABEL=RETPD=Ø,
//           DCB=(RECFM=BFS,BLKSIZE=28ØØ,LRECL=14Ø)
//WX25AUD  DD UNIT=SYSDA,SPACE=(TRK,(15,5),RLSE),
//           DCB=(RECFM=BFS,BLKSIZE=55Ø,LRECL=5Ø)
//SORTLIB  DD DSN=SYS1.SORTLIB,DISP=SHR
//SORTWKØ1 DD UNIT=SYSDA,SPACE=(CYL,&SS1SORT,,CONTIG)
//SORTWKØ2 DD UNIT=SYSDA,SPACE=(CYL,&SS1SORT,,CONTIG)
//SORTWKØ3 DD UNIT=SYSDA,SPACE=(CYL,&SS1SORT,,CONTIG)
//SORTWKØ4 DD UNIT=SYSDA,SPACE=(CYL,&SS1SORT,,CONTIG)
//SORTWKØ5 DD UNIT=SYSDA,SPACE=(CYL,&SS1SORT,,CONTIG)
//SORTWKØ6 DD UNIT=SYSDA,SPACE=(CYL,&SS1SORT,,CONTIG)
//SYSOUT   DD  SYSOUT=A
//SYSUDUMP DD  SYSOUT=A
```

Figure 3.12-01

JOB CONTROL STATEMENT (PROC) - OS

```
//P27AUDØ5 EXEC PGM=P27AUD
//IAØAAUD  DD  DSN=AUD.CABS.AØAAUD,UNIT=SYSDA,DISP=(OLD,DELETE)
//IA2ØAUD  DD  DSN=AUD.CABS.A2ØAUD,UNIT=TAPE9,DISP=(OLD,KEEP)
//IE2ØAUD  DD  DSN=AUD.CABS.E2ØAUD,UNIT=SYSDA,DISP=(OLD,DELETE)
//OC27AUD  DD  DSN=AUD.CABS.C27AUD,UNIT=(TAPE9,,DEFER),DISP=(NEW,KEEP),
//          VOL=(,,,16),DCB=(RECFM=BFS,BLKSIZE=133Ø,LRECL=133),
//          LABEL=RETPD=7
//WW27AUD  DD DSN=AUD.WORKTAPE,UNIT=(TAPE9,,DEFER),DISP=(NEW,DELETE),
//          VOL=(,,,16),LABEL=RETPD=Ø,
//          DCB=(RECFM=BFS,BLKSIZE=28ØØ,LRECL=14Ø)
//SORTLIB  DD DSN=SYS1.SORTLIB,DISP=SHR
//SORTWKØ1 DD UNIT=SYSDA,SPACE=(CYL,&SS1SORT,,CONTIG)
//SORTWKØ2 DD UNIT=SYSDA,SPACE=(CYL,&SS1SORT,,CONTIG)
//SORTWKØ3 DD UNIT=SYSDA,SPACE=(CYL,&SS1SORT,,CONTIG)
//SORTWKØ4 DD UNIT=SYSDA,SPACE=(CYL,&SS1SORT,,CONTIG)
//SORTWKØ5 DD UNIT=SYSDA,SPACE=(CYL,&SS1SORT,,CONTIG)
//SORTWKØ6 DD UNIT=SYSDA,SPACE=(CYL,&SS1SORT,,CONTIG)
//SYSOUT   DD  SYSOUT=A
//SYSUDUMP DD  SYSOUT=A
```

Figure 3.12-01

JOB CONTROL STATEMENT CARD DECK LISTING - DOS

```
// JOB AUDM2Ø C1DØR      CABS STATUS OF OPR RES          CYC=SOR
*  JOB STEP P2ØAUDØ1
// ASSGN SYSØØ1,X'DK2'
// TLBL IAØAAUD,'SOR.AØAAUD'        CABS CTL FILE TAPE
// TLBL IAØ1AUD,'SOR.AØ1AUD'        CABS MCF SOR
// TLBL IAØ7AUD,'SOR.AØ7AUD'        CABS INTERMEDIATE SOR
// TLBL OA2ØAUD,'SOR.A2ØAUD'        CABS DATA WITH DESCRIPTIONS
// DLBL OAØAAUD,'AAAAUD'            CABS CTL FILE DISK
// EXTENT SYSØ21,WRK1&P,1,Ø,2Ø,Ø6Ø,B=1
// DLBL OE2ØAUD,'E2ØAUD'       CABS CNTL RECORD
// EXTENT SYSØ23,WRK1&P,1,Ø,2Ø,1,B=1
// DLBL SORTWK1,'J2ØAUD'
// EXTENT SYSØØ1,WRK2&P,1,Ø,2Ø,1ØØØ,B=1
// EXEC P2ØAUD
P2ØAUD-CNTL (user control card options)
/*       PLACE P2ØAUD-CNTL CARD BEFORE THIS CARD
*  JOB STEP P21AUDØ2
// TLBL IA2ØAUD,'SOR.A2ØAUD'        CABS DATA WITH DESCRIPTIONS SOR
// DLBL IAØAAUD,'AAAAUD'         CABS CTL FILE DISK
// EXTENT SYSØ21,WRK1&P,1,Ø,2Ø,1,B=1
// DLBL IE2ØAUD,'E2ØAUD'       CABS CNTL RECORD
// EXTENT SYSØ23,WRK1&P,1,Ø,2Ø,1,B=1
// DLBL OC21AUD,'C21AUD,D'     PRINTFILE
// EXTENT SYSØ2Ø,WRK1&P,1,Ø,2Ø,1,B=1
// DLBL WB21AUD,'B21AUD'
// EXTENT SYSØ21,WRK1&P,1,Ø,2Ø,1ØØØ,B=1
// DLBL SORTWK1,'J21AUD'
// EXTENT SYSØØ1,WRK2&P,1,Ø,2Ø,1ØØØ,B=1
// TLBL OY21AUD,'Y21AUD'       SPOOL OUTPUT
// EXEC TDYNASN
OPEN OY21AUD,SYSØ13,OUTPUT
/*
// EXEC P21AUD
/*
// EXEC TDYNASN
CLOSE OY21AUD,SYSØ13,OUTPUT
/*
```

Figure 3.12-01

JOB CONTROL STATEMENT CARD DECK LISTING - DOS (CONTINUED)

```
*  JOB STEP P23AUDØ3
// TLBL IA2ØAUD,'SOR.A2ØAUD'   CABS DATA WITH DESCRIPTIONS
// DLBL IAØAAUD,'AAAAUD'
// EXTENT SYSØ21,WRK1&P,1,Ø,2Ø,1,B=1
// DLBL IE2ØAUD,'E2ØAUD'
// EXTENT SYSØ23,WRK1&P,1,Ø,2Ø,1,B=1
// DLBL OC23AUD,'C23AUD'       PRINT FILE
// EXTENT SYSØ21,WRK1&P,1,Ø,2Ø,1,B=1
// DLBL WW23AUD,'W23AUD'
// EXTENT SYSØ21,WRK1&P,1,Ø,2Ø,1ØØØ,B=1
// DLBL SORTWK1,'J23AUD'
// EXTENT SYSØØ1,WRK2&P,1,Ø,2Ø,1ØØØ,B=1
// EXEC P23AUD
/*
*  JOB STEP P25AUDØ4
// TLBL IA2ØAUD,'SOR.A2ØAUD'   CABS DATA WITH DESCRIPTIONS
// DLBL IAØAAUD,'AAAAUD'
// EXTENT SYSØ21,WRK1&P,1,Ø,2Ø,1,B=1
// DLBL IE2ØAUD,'E2ØAUD'
// EXTENT SYSØ23,WRK1&P,1,Ø,2Ø,1,B=1
// DLBL OC25AUD,'C25AUD'       PRINT FILE
// EXTENT SYSØ21,WRK1&P,1,Ø,2Ø,1,B=1
// DLBL WW25AUD,'W25AUD'
// EXTENT SYSØ21,WRK1&P,1,Ø,2Ø,1ØØØ,B=1
// DLBL WX25AUD,'X25AUD'
// EXTENT SYSØ21,WRK1&P,1,Ø,2Ø,2Ø,B=1
// DLBL SORTWK1,'J25AUD'
// EXTENT SYSØØ1,WRK2&P,1,Ø,2Ø,1ØØØ,B=1
// EXEC P25AUD
/*
*  JOB STEP P27AUDØ5
// TLBL IA2ØAUD,'SOR.A2ØAUD'
// DLBL IAØAAUD,'AAAAUD'
// EXTENT SYSØ21,WRK1&P,1,Ø,2Ø,1,B=1
// DLBL IE2ØAUD,'E2ØAUD'
// EXTENT SYSØ23,WRK1&P,1,Ø,2Ø,1,B=1
// DLBL OC27AUD,'C27AUD'       PRINT FILE
// EXTENT SYSØ21,WRK1&P,1,Ø,2Ø,1,B=1
// DLBL WW27AUD,'W27AUD'
// EXTENT SYSØ21,WRK1&P,1,Ø,2Ø,1ØØØ,B=1
// DLBL SORTWK1,'J27AUD'
// EXTENT SYSØØ1,WRK2&P,1,Ø,2Ø,1ØØØ,B=1
// EXEC P27AUD
/*
CLOSE SYSØ13
/*
```

Figure 3.12-01

JOB CONTROL STATEMENT CARD DECK LISTING - DOS (CONTINUED)

```
// DLBL OAØAAUD,'AAAAUD'
// EXTENT SYSØ21,WRK1&P,1,Ø,2Ø,1,B=1
// DLBL OE2ØAUD,'E2ØAUD'        CABS CNTL RECORD
// EXTENT SYSØ23,WRK1&P,1,Ø,2Ø,1,B=1
// DLBL OC21AUD,'C21AUD'        PRINT FILE
// EXTENT SYSØ2Ø,WRK1&P,1,Ø,2Ø,1,B=1
// DLBL WB21AUD,'B21AUD'
// EXTENT SYSØ21,WRK1&P,1,Ø,2Ø,1,B=1
// DLBL OC23AUD,'C23AUD'        PRINT FILE
// EXTENT SYSØ21,WRK1&P,1,Ø,2Ø,1,B=1
// DLBL WW23AUD,'W23AUD'
// EXTENT SYSØ21,WRK1&P,1,Ø,2Ø,1ØØØ,B=1
// DLBL OC25AUD,'C25AUD'        PRINT FILE
// EXTENT SYSØ21,WRK1&P,1,Ø,2Ø,1,B=1
// DLBL WW25AUD,'W25AUD'
// EXTENT SYSØ21,WRK1&P,1,Ø,2Ø,1ØØØ,B=1
// DLBL WX25AUD,'X25AUD'
// EXTENT SYSØ21,WRK1&P,1,Ø,2Ø,2Ø,B=1
// DLBL OC27AUD,'C27AUD'        PRINT FILE
// EXTENT SYSØ21,WRK1&P,1,Ø,2Ø,1,B=1
// DLBL WW27AUD,'W27AUD'
// EXTENT SYSØ21,WRK1&P,1,Ø,2Ø,1ØØØ,B=1
// EXEC ADASD
/*
/&
```

Figure 3.12-01

JOB CONTROL STATEMENT (RETRIEVAL) - OS

```
RUN  ID:  AUDM2Ø
RUN NAME:  CABS STATUS OF OPERATING RESOURCES

//AUDM2Ø   JOB (accounting information)
//AUDM2ØØ1 EXEC AUDM2ØS1
//P2ØAUDØ1.SYSIN DD *
P2ØAUD-CNTL          (user control card options)
/*
//
```

Figure 3.12-01

RUN SETUP–CONSOLE OPERATING INFORMATION

For use of this form, see TB 18-111; the proponent agency is CSA.

1. DATE: 811201

2. RUN ID	3. RUN TITLE	4. SECLAS/PRIV
AUDM2Ø	CABS STATUS OF OPERATING RESOURCES	U/N

6. CORE REQ	7. POINT OF CONTACT	8. RUN AS OF	9. RUN DATE
98K			

10. CONT CD ID	11. DATE/TIME SCH IN	12. DATE/TIME SCH OUT
P2ØAUD-CNTL		

13. SYSTEM	14. RUN NO.	15. EST TIME	16. LANGUAGE
OS/DOS		2Ø MIN	COBOL

5. PERIPHERAL EQUIPMENT

TAPE DRIVES	3
DISK DRIVES	1
CARD READER	1
CARD PUNCH	Ø
PRINTER	1
OTHER	

17. ID CODE	18. FILE ID	19. VOLUME NO.	20. I/O	21. MEDIA	22. UNIT	23. RETN	24. SECLAS/ PRIV	25. SOURCE	26. DISPOSITION	27. OPERATOR NOTES
P2ØAUDØ1	AØAAUD		I	TAPE			U/N	LIBRARY	LIBRARY	
	AØ1AUD		I	TAPE			U/N	LIBRARY	LIBRARY	
	AØ7AUD		I	TAPE			U/N	LIBRARY	LIBRARY	
	A2ØAUD		O	TAPE		DØ3	U/N	SCRATCH	P21AUDØ2	
P21AUDØ2	A2ØAUD		I	TAPE			U/N	P2ØAUDØ1	P23AUDØ3	
	C21AUD	*	O	TAPE		DØ7	U/N	SCRATCH	SPOOL/LIBRARY	
	Y21AUD	**	O	TAPE		DØ7	U/N	SCRATCH	SPOOL/LIBRARY	

28. REMARKS

* OS only.
** DOS only.

DA FORM 1 NOV 78 4744

☆U.S. Government Printing Office: 1980—310-981/8838

ADSM 18-C1D-AUD-IBM OM
1 DEC 81

Figure 3.12-01

RUN SETUP—CONSOLE OPERATING INFORMATION
For use of this form, see TB 18-111; the proponent agency is CSA.

1. DATE: 811201

2. RUN ID	3. RUN TITLE	4. SECLAS/PRIV
AUDM2Ø	CABS STATUS OF OPERATING RESOURCES(CONT)	U/N

6. CORE REQ	7. POINT OF CONTACT	8. RUN AS OF	9. RUN DATE

10. CONT CD ID	11. DATE/TIME SCH IN	12. DATE/TIME SCH OUT

13. SYSTEM	14. RUN NO.	15. EST TIME	16. LANGUAGE

5. PERIPHERAL EQUIPMENT
TAPE DRIVES
DISK DRIVES
CARD READER
CARD PUNCH
PRINTER
OTHER

17. ID CODE	18. FILE ID	19. VOLUME NO.	20. I/O	21. MEDIA	22. UNIT	23. RETN	24. SECLAS/ PRIV	25. SOURCE	26. DISPOSITION	27. OPERATOR NOTES
P23AUDØ3	A2ØAUD		I	TAPE			U/N	P21AUDØ2	P25AUDØ4	
	C23AUD	*	O	TAPE		DØ7	U/N	SCRATCH	SPOOL/LIBRARY	
	Y21AUD	**	O	TAPE			U/N	SCRATCH	SPOOL/LIBRARY	
P25AUDØ4	A2ØAUD		I	TAPE			U/N	P23AUDØ3	P27AUDØ5	
	C25AUD	*	O	TAPE		DØ7	U/N	SCRATCH	SPOOL/LIBRARY	
	Y21AUD	**	O	TAPE			U/N	SCRATCH	SPOOL/LIBRARY	
P27AUDØ5	A2ØAUD		I	TAPE			U/N	P25AUDØ4	LIBRARY	
	C27AUD	*	O	TAPE		DØ7	U/N	SCRATCH	SPOOL/LIBRARY	
	Y21AUD	**	O	TAPE			U/N	SCRATCH	SPOOL/LIBRARY	

28. REMARKS

* OS only.
** DOS only.

DA FORM 1 NOV 78 4744

* U.S. Government Printing Office 1980—310-961/8838

Figure 3.12-01

RUN MESSAGES AND RESPONSES For use of this form, see TB 18-111; the proponent agency is CSA.	1. DATE 811201
2. RUN ID AUDM2Ø	3. RUN TITLE CABS STATUS OF OPERATING RESOURCES

4. MESSAGE DISPLAYED	5. ACTION REQUIRED
CONSOLE MESSAGES:	
SAME AS SYSOUT/SYSLST	
SYSOUT/SYSLST MESSAGES:	
P2ØAUD Ø1 H NO CONTROL CARD	P2ØAUD-CNTL card is missing or misspelled. Correct and restart the run.
P2ØAUD Ø2 H CONTROL CARD ERROR	Values in P2ØAUD-CNTL are not valid. Correct and restart the run.
P2ØAUD Ø3 H CONTROL FILE MISSING	There was no Control File (AØAAUD) or there were no records on Control File. Correct and rerun.
P21AUD Ø1 H CONTROL CARD ERROR	Month field on control card (P2ØAUD-CNTL) is invalid. Correct and restart the run.
P21AUD Ø4 H NO BUDGET DATA	There were no records on the A2ØAUD file. Problem must be resolved by functional user and/or functional proponent.
P21AUD Ø5 H NO CONTROL CARD	Step P21AUDØ2 is dependent upon P2ØAUD-CNTL passed by step P2ØAUDØ1. Check run set-up. Correct and restart run.
P21AUD Ø6 H NO SUMMARY RCD	There were no summary records on the A2ØAUD file. Problem must be resolved by the functional user and/or functional proponent.

6. REMARKS

DA FORM 1 NOV 78 4745

Figure 3.12-01

RUN MESSAGES AND RESPONSES For use of this form, see TB 18-111; the proponent agency is CSA.	1. DATE 811201
2. RUN ID AUDM2Ø	3. RUN TITLE CABS STATUS OF OPERATING RESOURCES (CONTINUED)

4. MESSAGE DISPLAYED	5. ACTION REQUIRED
P21AUD Ø7 H SORT FAILURE	Check sort messages, determine the cause for the failure, correct and restart the run.
P21AUD Ø9 H CNTL CARD DATE ERR	The as of date in P2ØAUD-CNTL card must be equal to or less than the current date. Correct and restart the run.
P21AUD 1Ø H SPOOL WRITE ERROR	Self explanatory (DOS). Restart per Recovery Instructions.
P23AUD 11 H *	
* CNTL CARD MISSING	Step P23AUDØ3 is dependent upon upon P2ØAUD-CNTL passed by preceding step. Check run set-up. Correct and restart the run.
* INVALID SORT	Check sort messages to determine cause of failure. Correct and restart the run.
* NO INPUT SELECTED	None of the records on A2ØAUD met selection criteria for this step. Notify CABS analyst.
* NO Q CONTROL RCDS	This step requires control information from type 'Q' records on the CABS Control File (AOAAUD) and none were found. Notify CABS analyst.
* SKIPPED PER OPTION	Information only. This step was purposely bypassed per option in P2ØAUD-CNTL.

6. REMARKS

DA FORM 1 NOV 78 4745

RUN MESSAGES AND RESPONSES For use of this form, see TB 18-111; the proponent agency is CSA.		1. DATE 811201
2. RUN ID AUDM2Ø	3. RUN TITLE CABS STATUS OF OPERATING RESOURCES (CONTINUED)	

4. MESSAGE DISPLAYED	5. ACTION REQUIRED
P25AUD 11 H *	
* CNTL CARD MISSING	Step P25AUDØ3 is dependent upon upon P2ØAUD-CNTL passed by preceding step. Check run set-up. Correct and restart the run.
* INVALID SORT	Check sort messages to determine cause of failure. Correct and restart the run.
* NO INPUT SELECTED	None of the records on A2ØAUD met selection criteria for this step. Notify CABS analyst.
* NO R CONTROL RCDS	This step requires control information from type 'R' records on the CABS Control File (AOAAUD) and none were found. Notify CABS analyst.
* SKIPPED PER OPTION	Information only. This step was purposely bypassed per option in P2ØAUD-CNTL.

6. REMARKS

DA FORM 1 NOV 78 4745

Figure 3.12-01

RUN MESSAGES AND RESPONSES For use of this form, see TB 18-111; the proponent agency is CSA.	1. DATE 811201
2. RUN ID AUDM2Ø	3. RUN TITLE CABS STATUS OF OPERATING RESOURCES (CONTINUED)

4. MESSAGE DISPLAYED	5. ACTION REQUIRED
P27AUD 11 H *	
* CNTL CARD MISSING	Step P27AUDØ5 is dependent upon P2ØAUD-CNTL passed by preceding step. Check run set-up. Correct and restart the run.
* INVALID SORT	Check sort messages to determine cause of failure. Correct and restart the run.
* NO INPUT SELECTED	None of the records on A2ØAUD met selection criteria for this step. Notify CABS analyst.
* SKIPPED PER OPTION	Information only. This step was purposely bypassed per option in P2ØAUD-CNTL.

6. REMARKS

DA FORM 1 NOV 78 4745

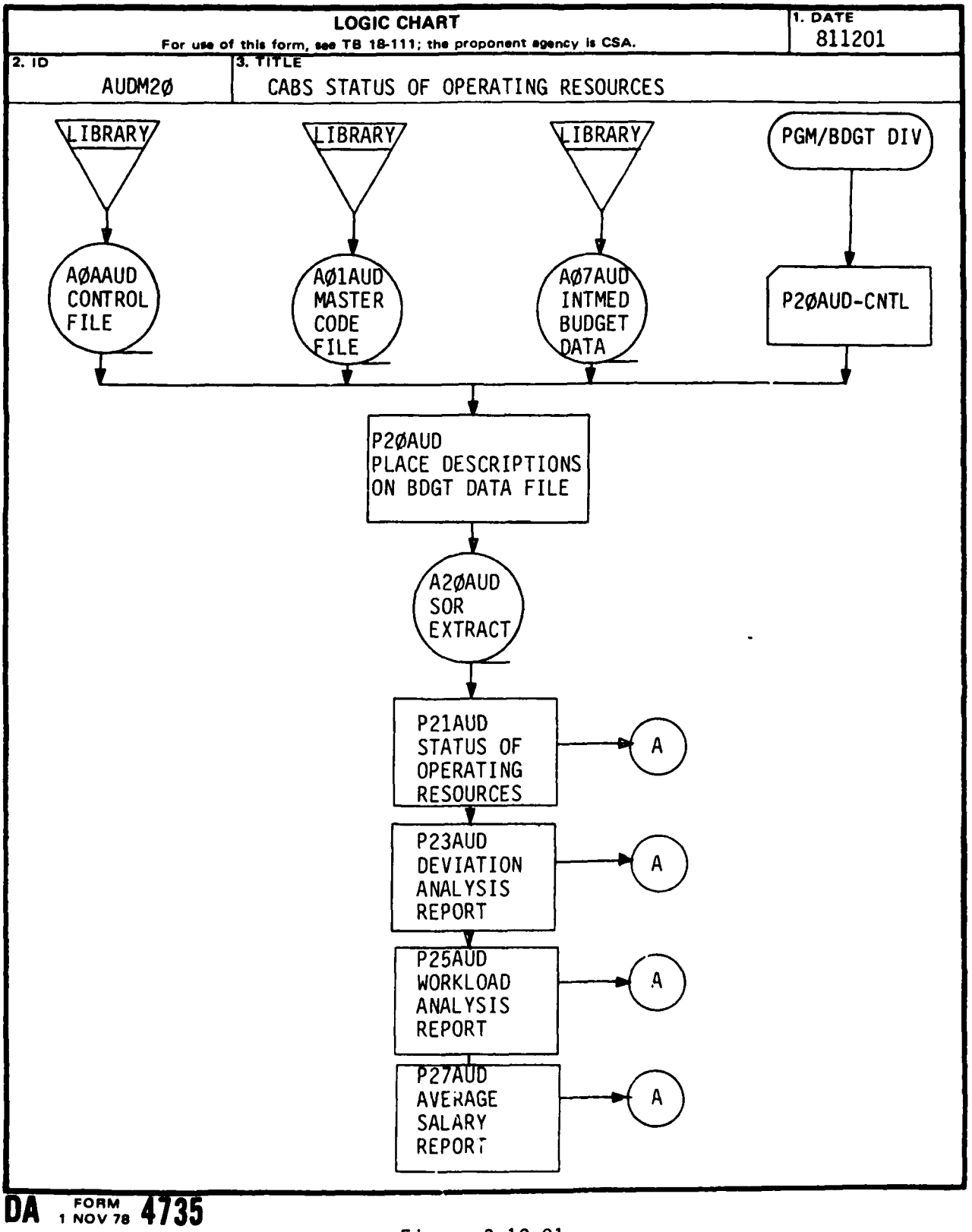

Figure 3.12-01

LOGIC CHART For use of this form, see TB 18-111; the proponent agency is CSA.	1. DATE 811201
2. ID AUDM2Ø	3. TITLE CABS STATUS OF OPERATING RESOURCES

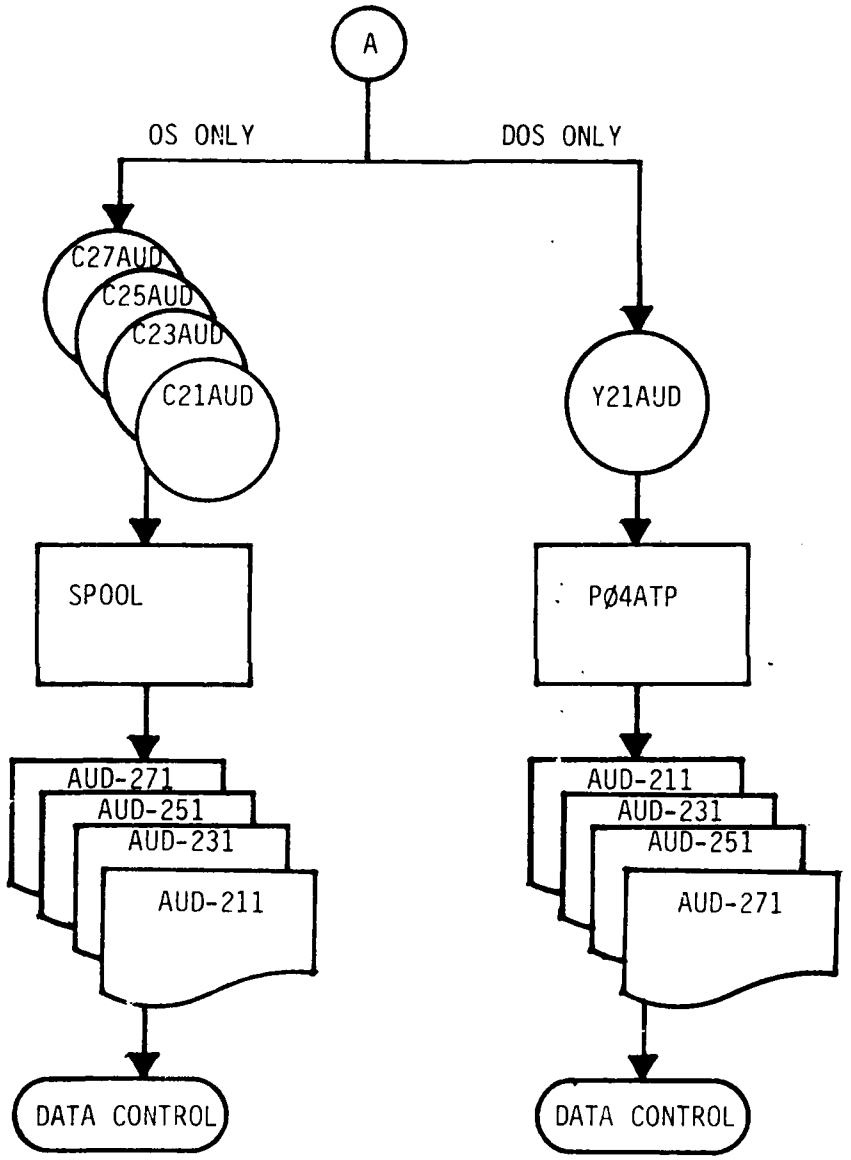

DA FORM 1 NOV 78 4735

Figure 3.12-01

AD-A122 123 CABS: COMMAND AUTOMATED BUDGET SYSTEM COMPUTER OPERATION MANUAL(U) ARMY COMPUTER SYSTEMS COMMAND SUPPORT GROUP ATLANTA FORT GILL... 01 DEC 81 3/3

UNCLASSIFIED ADSM-18-C1D-AUD-IBM-OM DOD/DF-83/001A F/G 9/2 NL

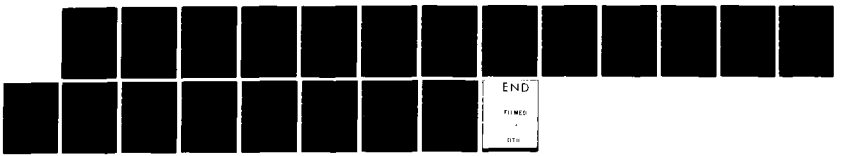

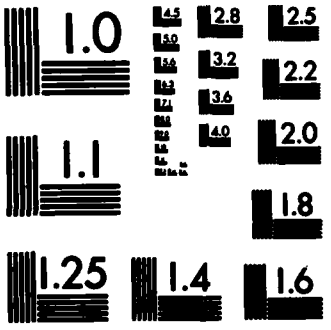

MICROCOPY RESOLUTION TEST CHART
NATIONAL BUREAU OF STANDARDS-1963-A

OUTPUT REPORTS

For use of this form, see TB 18-111; the proponent agency is CSA.

1. RUN ID: AUDM2Ø

2. DATE: 811201

3. FILE ID	4. MEDIA	5. PCN/RCS	6. SECLAS/ PRIV	7. PRINTER					8. VOLUME	9. REPORT TITLE	10. DISPOSITION
				PAPER a.	NO. OF CYS b.	TAPE c.	PRINT POS d.	LINE UP e.			
C21AUD	DISK	AUD-211	U/N							STATUS OF OPERATING RESOURCES	PGM/BUDGET DIVISION
C23AUD	DISK	AUD-231	U/N							DEVIATION ANALYSIS	PGM/BUDGET DIVISION
C25AUD	DISK	AUD-251	U/N							WORKLOAD ANALYSIS REPORT	PGM/BUDGET DIVISION
C27AUD	DISK	AUD-271	U/N							AVERAGE SALARY REPORT	PGM/BUDGET DIVISION

11. REMARKS

DA FORM 1 NOV 78 4748

Figure 3.12-01

RECOVERY INSTRUCTIONS For use of this form, see TB 18-111; the proponent agency is CSA.	1. DATE 811201
2. RUN ID AUDM2Ø	3. RUN TITLE CABS STATUS OF OPERATING RESOURCES
4. ID CODE	5. RECOVERY INSTRUCTIONS
P2ØAUDØ1	Restart with the original input and JCL setup.
P21AUDØ2 P23AUDØ3 P25AUDØ4 P27AUDØ5	See P2ØAUD-CNTL format and options available. Change options if appropriate to bypass those steps successfully completed prior to ABEND. Note that JCL overrides may be needed to control tape selection consistent with options elected.
6. REMARKS	

DA FORM 1 NOV 78 4751

Figure 3.12-01

3.13 Run Description AUDM14. Reference Figure 3.13-01.

INDEX FOR FIGURE 3.13-01

	NAME	PAGE NO.
3.13.1	Control Input	
3.13.1.1	Control Cards	3-168
3.13.1.2	Control Input Statements	
3.13.1.2.1	Job Control Statements (PROC)	3-169
3.13.1.2.2	Job Control Statements (RETRIEVAL)	3-171
3.13.2	Management Information	
3.13.2.1	Run Setup-Console Operating Information	3-172
3.13.2.2	Run Messages and Responses	3-173
3.13.2.3	Logic Chart	3-174
3.13.3	Input-Output Files	See DA Form 4744 for I/O file information
3.13.4	Output Reports	NA
3.13.5	Reproduced Output Reports	NA
3.13.6	Restart/Recovery Procedures	
3.13.6.1	Recovery Instructions	3-175

CONTROL CARD PREPARATION For use of this form, see TB 18-111; the proponent agency is CSA.	1. DATE 811201
2. RUN ID AUDM14	3. RUN TITLE STANFINS EXTRACT
4. CONTROL CARD ID P14AUD-CNTL	5. CONTROL CARD TITLE P14AUD-CONTROL-CARD

6. CONTROL CARD PURPOSE AND REMARKS

To provide Fiscal Year of STANFINS data to be extracted.

7. USER INFORMATION, IF REQUIRED

8. CONTROL CARD INSTRUCTIONS

FIELD a.	POSITION b.	PREPARATION INSTRUCTIONS c.	RESPONSIBLE AGENCY d.
CNTL-ID	1-11	Constant "P14AUD-CNTL"	
	12-14	Literal "FY="	
FISCAL-YR	15	Last digit of the fiscal year for the data that is to be extracted.	Functional User
	16-8Ø	Blank	

DA FORM 1 NOV 78 4743

Figure 3.13-01

JOB CONTROL STATEMENT (PROC) - OS

```
//AUDM14S1 PROC
//*
//*  ********************************************************************
//*  *    THIS PROC EXTRACTS STANFINS SOR DATA FOR INPUT TO CABS       *
//*  ********************************************************************
//*
//P14AUDØ1 EXEC PGM=P14AUD
//IEXUAVK  DD DSN=AVK.MASTER.EXUAVK(Ø),UNIT=TAPE9,DISP=(OLD,PASS),
//         DCB=(RECFM=FB,LRECL=152,BLKSIZE=912Ø),LABEL=(3,SL),
//         VOL=(,RETAIN)
//IAXWAVK  DD DSN=AVK.MASTER.AXWAVK(Ø),UNIT=TAPE9,DISP=(OLD,PASS),
//         DCB=(RECFM=FB,LRECL=16Ø,BLKSIZE=992Ø),LABEL=(9,SL),
//         VOL=REF=*.IEXUAVK
//OB14AUD  DD DSN=AUD.CABS.B14AUD,UNIT=TAPE9,DISP=(NEW,KEEP),
//         DCB=(RECFM=FBS,LRECL=81,BLKSIZE=81Ø),LABEL=RETPD=45
//WW14AUD  DD UNIT=SYSDA,DISP=(NEW,DELETE),SPACE=(CYL,(5Ø,5),RLSE),
//         DCB=(RECFM=FB,LRECL=16Ø,BLKSIZE=16ØØ)
//WX14AUD  DD UNIT=SYSDA,DISP=(NEW,DELETE),SPACE=(CYL,(5Ø,5),RLSE),
//         DCB=(RECFM=FB,LRECL=152,BLKSIZE=152Ø)
//SYSOUT   DD SYSOUT=A
//SYSUDUMP DD SYSOUT=A
//SYSIN    DD DUMMY,DCB=BLKSIZE=8Ø
```

Figure 3.13-01

JOB CONTROL STATEMENT CARD DECK LISTING - DOS

```
// JOB AUDM14  C1DØR      CABS EXTRACT STANFINS SOR DATA
*  JOB STEP P14AUDØ1
// TLBL IAXWAVK,'AXWAVK'
// TLBL IEXUAVK,'EXUAVK'
// TLBL OB14AUD,'B14AUD'
// DLBL WW14AUD,'W14AUD',Ø,SD
// EXTENT SYSØ21,WRK2&P,1,Ø,2Ø,1ØØ,B=1
// DLBL WX14AUD,'X14AUD',Ø,SD
// EXTENT SYSØ22,WRK2&P,1,Ø,2Ø,1ØØ,B=1
// EXEC P14AUD
P14AUD-CNTL
/*
// DLBL WW14AUD,'W14AUD'
// EXTENT SYSØ21,WRK2&P,1,Ø,2Ø,1ØØ,B=1
// DLBL WX14AUD,'X14AUD'
// EXTENT SYSØ22,WRK2&P,1,Ø,2Ø,1ØØ,B=1
// EXEC ADASD
/&
```

NOTE: Input STANFINS tape must be the "XU" tape created in the STANFINS Monthly Cycle.

Figure 3.13-01

JOB CONTROL STATEMENT (RETRIEVAL) - OS

RUN ID: AUDM14
RUN NAME: CABS EXTRACT STANFINS SOR DATA

```
//AUDM14   JOB (Accounting Information)
//AUDM14Ø1 EXEC AUDM14S1
//P14AUDØ1.IEXUAVK  DD  DSN=AVK.MASTER.EXUAVK.G9999V99
//P14AUDØ1.IAXWAVK  DD  DSN=AVK.MASTER.AXWAVK.G9999V99
//P14AUDØ1.SYSIN DD *
P14AUD-CNTL    (User Control Card Option)
/*
//
```

NOTE: Input files EXUAVK and AXWAVK must be on the "XU" tape created by the STANFINS Monthly Cycle. If the Monthly "XU" tape is the current version when this job is processed, remove the override cards for IEXUAVK and IAXWAVK; else use the overrides and replace "9999V99" with the generation number of the files created by the STANFINS Monthly Cycle.

Figure 3.13-01

RUN SETUP—CONSOLE OPERATING INFORMATION

For use of this form, see TB 18-111; the proponent agency is CSA.

1. DATE	
811201	

2. RUN ID	3. RUN TITLE	4. SECLAS/PRIV
AUDM14	STANFINS EXTRACT	U/N

6. CORE REQ	7. POINT OF CONTACT	8. RUN AS OF	9. RUN DATE
78K			

10. CONT CD ID	11. DATE/TIME SCH IN	12. DATE/TIME SCH OUT
P14AUD-CNTL		

13. SYSTEM	14. RUN NO.	15. EST TIME	16. LANGUAGE
OS/DOS		15 MIN	COBOL

5. PERIPHERAL EQUIPMENT

TAPE DRIVES	2
DISK DRIVES	1
CARD READER	1
CARD PUNCH	Ø
PRINTER	1
OTHER	Ø

17. ID CODE	18. FILE ID	19. VOLUME NO.	20. I/O	21. MEDIA	22. UNIT	23. RETN	24. SECLAS/ PRIV	25. SOURCE	26. DISPOSITION	27. OPERATOR NOTES
P14AUDØ1	AXWAVK 1/		I	TAPE			U/N	LIBRARY	LIBRARY	
	B14AUD		O	TAPE		D45	U/N	SCRATCH	LIBRARY	
	EXUAVK 1/		I	TAPE			U/N	LIBRARY	LIBRARY	
	W14AUD		O/I	DISK			U/N	SCRATCH	SCRATCH	
	X14AUD		O/I	DISK			U/N	SCRATCH	SCRATCH	

28. REMARKS

1/ Input STANFINS files are on the "XU" tape created by the STANFINS Monthly Cycle.

DA FORM 1 NOV 78 4744

☆U.S. Government Printing Office: 1980—310-981/6838

Figure 3.13-01

RUN MESSAGES AND RESPONSES For use of this form, see TB 18-111; the proponent agency is CSA.	1. DATE 811201
2. RUN ID AUDM14	3. RUN TITLE STANFINS EXTRACT

4. MESSAGE DISPLAYED	5. ACTION REQUIRED
CONSOLE MESSAGES: Same as SYSOUT/SYSLST SYSOUT/SYSLST MESSAGES: P14AUD Ø1 H INVALID OR NO PGM CTL CARD	A valid P14AUD-CNTL card must be present. Correct or insert control card and restart the run.

6. REMARKS

DA FORM 1 NOV 78 4745

Figure 3.13-01

LOGIC CHART
For use of this form, see TB 18-111; the proponent agency is CSA.

1. DATE: 811201

2. ID: AUDM14

3. TITLE: STANFINS EXTRACT

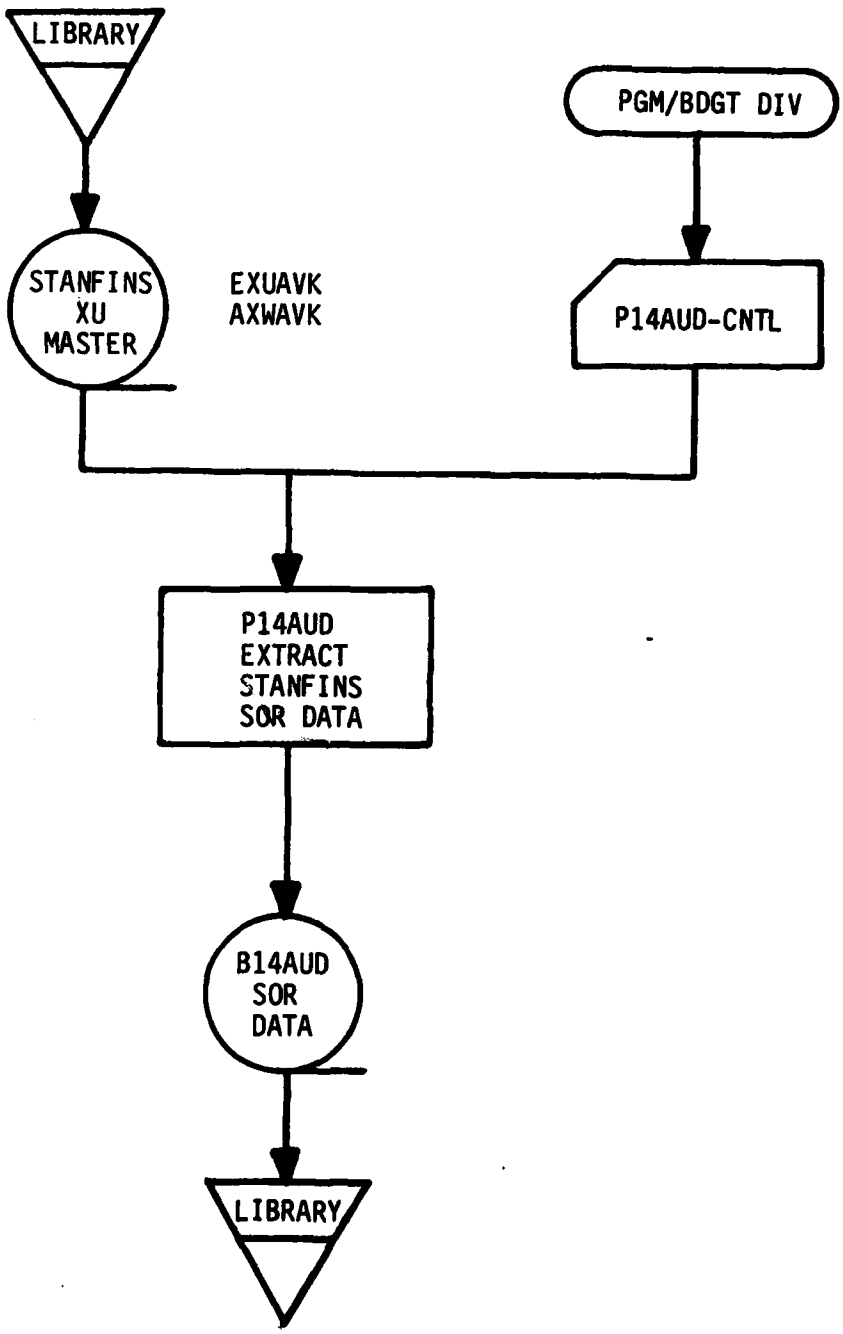

DA FORM 1 NOV 78 4735

Figure 3.13-01

RECOVERY INSTRUCTIONS For use of this form, see TB 18-111; the proponent agency is CSA.	1. DATE 811201
2. RUN ID AUDM14	3. RUN TITLE STANFINS EXTRACT
4. ID CODE	5. RECOVERY INSTRUCTIONS
P14AUDØ1	Restart the run.
6. REMARKS	

DA FORM 1 NOV 78 4751

Figure 3.13-01

The proponent agency of this manual is USACSC Support Group Atlanta (SGA). Users are invited to send comments and suggested improvements on DA Form 2028 (Recommended Changes to Publications) direct to Cdr, USACSC, ATTN: ACSC-SGA, Bldg 906, Fort Gillem, Forest Park, GA 30050

FOR THE COMMANDER:

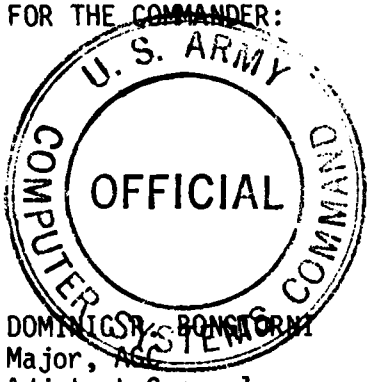

JOHN F. VAN WERT, JR
Colonel, GS
Chief of Staff

DOMINIC R. BONSTORNI
Major, AGC
Adjutant General

JOB CONTROL STATEMENTS TO PRODUCE DYNAM/T TAPE PULL LISTS

```
// JOB AUDPUL                    PULL LIST, CABS AUDTØA  CYC=AOC
// EXEC TDYNLIST
TITLE=CABS PULL LIST, AUDTØA AOC
DN='AOC.AØAAUD',JOB=AUDTØA  AOC
DN='AOC.AØ1AUD',JOB=AUDTØA  AOC
NOTE=2 SCRATCH TAPES FOR AUDTØA  AOC
/*
/&

// JOB AUDPUL                    PULL LIST, CABS AUDTØA  CYC=COB
// EXEC TDYNLIST
TITLE=CABS PULL LIST, AUDTØA COB
DN='COB.AØAAUD',JOB=AUDTØA  COB
DN='COB.AØ1AUD',JOB=AUDTØA  COB
NOTE=2 SCRATCH TAPES FOR AUDTØA  COB
/*
/&

// JOB AUDPUL                    PULL LIST, CABS AUDTØA  CYC=OBL
// EXEC TDYNLIST
TITLE=CABS PULL LIST, AUDTØA OBL
DN='OBL.AØAAUD',JOB=AUDTØA  OBL
DN='OBL.AØ1AUD',JOB=AUDTØA  OBL
NOTE=2 SCRATCH TAPES FOR AUDTØA  OBL
/*
/&

// JOB AUDPUL                    PULL LIST, CABS AUDTØA  CYC=SOR
// EXEC TDYNLIST
TITLE=CABS PULL LIST, AUDTØA SOR
DN='SOR.AØAAUD',JOB=AUDTØA  SOR
DN='SOR.AØ1AUD',JOB=AUDTØA  SOR
NOTE=2 SCRATCH TAPES FOR AUDTØA  SOR
/*
/&
```

JOB CONTROL STATEMENTS TO PRODUCE DYNAM/T TAPE PULL LISTS

```
// JOB AUDPUL                PULL LIST, CABS AUDTØ1  CYC=AOC
// EXEC TDYNLIST
TITLE=CABS PULL LIST, AUDTØ1 AOC
DN='AOC.AØAAUD',JOB=AUDTØ1  AOC
DN='AOC.AØ1AUD',JOB=AUDTØ1  AOC
DN='AOC.BØ1AUD',JOB=AUDTØ1  AOC  OPTIONAL INPUT
NOTE=2 SCRATCH TAPES FOR AUDTØ1  AOC
/*
/&

// JOB AUDPUL                PULL LIST, CABS AUDTØ1  CYC=COB
// EXEC TDYNLIST
TITLE=CABS PULL LIST, AUDTØ1 COB
DN='COB.AØAAUD',JOB=AUDTØ1  COB
DN='COB.AØ1AUD',JOB=AUDTØ1  COB
DN='COB.BØ1AUD',JOB=AUDTØ1  COB  OPTIONAL INPUT
NOTE=2 SCRATCH TAPES FOR AUDTØ1  COB
/*
/&

// JOB AUDPUL                PULL LIST, CABS AUDTØ1  CYC=OBL
// EXEC TDYNLIST
TITLE=CABS PULL LIST, AUDTØ1 OBL
DN='OBL.AØAAUD',JOB=AUDTØ1  OBL
DN='OBL.AØ1AUD',JOB=AUDTØ1  OBL
DN='OBL.BØ1AUD',JOB=AUDTØ1  OBL  OPTIONAL INPUT
NOTE=2 SCRATCH TAPES FOR AUDTØ1  OBL
/*
/&

// JOB AUDPUL                PULL LIST, CABS AUDTØ1  CYC=SOR
// EXEC TDYNLIST
TITLE=CABS PULL LIST, AUDTØ1 SOR
DN='SOR.AØAAUD',JOB=AUDTØ1  SOR
DN='SOR.AØ1AUD',JOB=AUDTØ1  SOR
DN='SOR.BØ1AUD',JOB=AUDTØ1  SOR  OPTIONAL INPUT
NOTE=2 SCRATCH TAPES FOR AUDTØ1  SOR
/*
/&
```

JOB CONTROL STATEMENTS TO PRODUCE DYNAM/T TAPE PULL LISTS

```
// JOB AUDPUL                PULL LIST, CABS AUDTØ2  CYC=AOC
// EXEC TDYNLIST
TITLE=CABS PULL LIST, AUDTØ2 AOC
DN='AOC.AØ1AUD',JOB=AUDTØ2  AOC
DN='AOC.AØAAUD',JOB=AUDTØ2  AOC
DN='AOC.BØ2AUD',JOB=AUDTØ2  AOC
DN='AOC.AØ2AUD',JOB=AUDTØ2  AOC  OPTIONAL INPUT
NOTE=2 SCRATCH TAPES FOR AUDTØ2  AOC
/*
/&

// JOB AUDPUL                PULL LIST, CABS AUDTØ2  CYC=COB
// EXEC TDYNLIST
TITLE=CABS PULL LIST, AUDTØ2 COB
DN='COB.AØ1AUD',JOB=AUDTØ2  COB
DN='COB.AØAAUD',JOB=AUDTØ2  COB
DN='COB.BØ2AUD',JOB=AUDTØ2  COB
DN='COB.AØ2AUD',JOB=AUDTØ2  COB  OPTIONAL INPUT
NOTE=2 SCRATCH TAPES FOR AUDTØ2  COB
/*
/&

// JOB AUDPUL                PULL LIST, CABS AUDTØ2  CYC=OBL
// EXEC TDYNLIST
TITLE=CABS PULL LIST, AUDTØ2 OBL
DN='OBL.AØ1AUD',JOB=AUDTØ2  OBL
DN='OBL.AØAAUD',JOB=AUDTØ2  OBL
DN='OBL.BØ2AUD',JOB=AUDTØ2  OBL
DN='OBL.AØ2AUD',JOB=AUDTØ2  OBL  OPTIONAL INPUT
NOTE=2 SCRATCH TAPES FOR AUDTØ2  OBL
/*
/&

// JOB AUDPUL                PULL LIST, CABS AUDTØ2  CYC=SOR
// EXEC TDYNLIST
TITLE=CABS PULL LIST, AUDTØ2 SOR
DN='SOR.AØ1AUD',JOB=AUDTØ2  SOR
DN='SOR.AØAAUD',JOB=AUDTØ2  SOR
DN='SOR.BØ2AUD',JOB=AUDTØ2  SOR
DN='SOR.AØ2AUD',JOB=AUDTØ2  SOR  OPTIONAL INPUT
NOTE=2 SCRATCH TAPES FOR AUDTØ2  SOR
/*
/&
```

JOB CONTROL STATEMENTS TO PRODUCE DYNAM/T TAPE PULL LISTS

```
// JOB AUDPUL                PULL LIST, CABS AUDTØ3  CYC=AOC
// EXEC TDYNLIST
TITLE=CABS PULL LIST, AUDTØ3 AOC
DN='AOC.AØAAUD',JOB=AUDTØ3  AOC
DN='AOC.BØ2AUD',JOB=AUDTØ3  AOC
NOTE=2 SCRATCH TAPES FOR AUDTØ3  AOC
/*
/&

// JOB AUDPUL                PULL LIST, CABS AUDTØ3  CYC=COB
// EXEC TDYNLIST
TITLE=CABS PULL LIST, AUDTØ3 COB
DN='COB.AØAAUD',JOB=AUDTØ3  COB
DN='COB.BØ2AUD',JOB=AUDTØ3  COB
NOTE=2 SCRATCH TAPES FOR AUDTØ3  COB
/*
/&

// JOB AUDPUL                PULL LIST, CABS AUDTØ3  CYC=OBL
// EXEC TDYNLIST
TITLE=CABS PULL LIST, AUDTØ3 OBL
DN='OBL.AØAAUD',JOB=AUDTØ3  OBL
DN='OBL.BØ2AUD',JOB=AUDTØ3  OBL
NOTE=2 SCRATCH TAPES FOR AUDTØ3  OBL
/*
/&

// JOB AUDPUL                PULL LIST, CABS AUDTØ3  CYC=SOR
// EXEC TDYNLIST
TITLE=CABS PULL LIST, AUDTØ3 SOR
DN='SOR.AØAAUD',JOB=AUDTØ3  SOR
DN='SOR.BØ2AUD',JOB=AUDTØ3  SOR
NOTE=2 SCRATCH TAPES FOR AUDTØ3  SOR
/*
/&
```

JOB CONTROL STATEMENTS TO PRODUCE DYNAM/T TAPE PULL LISTS

```
// JOB AUDPUL                  PULL LIST, CABS AUDTØ4  CYC=AOC
// EXEC TDYNLIST
TITLE=CABS PULL LIST, AUDTØ4 AOC
DN='AOC.AØAAUD',JOB=AUDTØ4  AOC
DN='AOC.BØ2AUD',JOB=AUDTØ4  AOC
NOTE=2 SCRATCH TAPES FOR AUDTØ4  AOC
/*
/&

// JOB AUDPUL                  PULL LIST, CABS AUDTØ4  CYC=COB
// EXEC TDYNLIST
TITLE=CABS PULL LIST, AUDTØ4 COB
DN='COB.AØAAUD',JOB=AUDTØ4  COB
DN='COB.BØ2AUD',JOB=AUDTØ4  COB
NOTE=2 SCRATCH TAPES FOR AUDTØ4  COB
/*
/&

// JOB AUDPUL                  PULL LIST, CABS AUDTØ4  CYC=OBL
// EXEC TDYNLIST
TITLE=CABS PULL LIST, AUDTØ4 OBL
DN='OBL.AØAAUD',JOB=AUDTØ4  OBL
DN='OBL.BØ2AUD',JOB=AUDTØ4  OBL
NOTE=2 SCRATCH TAPES FOR AUDTØ4  OBL
/*
/&

// JOB AUDPUL                  PULL LIST, CABS AUDTØ4  CYC=SOR
// EXEC TDYNLIST
TITLE=CABS PULL LIST, AUDTØ4 SOR
DN='SOR.AØAAUD',JOB=AUDTØ4  SOR
DN='SOR.BØ2AUD',JOB=AUDTØ4  SOR
NOTE=2 SCRATCH TAPES FOR AUDTØ4  SOR
/*
/&
```

JOB CONTROL STATEMENTS TO PRODUCE DYNAM/T TAPE PULL LISTS

```
// JOB AUDPUL                  PULL LIST, CABS AUDTØ5  CYC=AOC
// EXEC TDYNLIST
TITLE=CABS PULL LIST, AUDTØ5 AOC
DN='AOC.BØ2AUD',JOB=AUDTØ5  AOC
NOTE=2 SCRATCH TAPES FOR AUDTØ5  AOC
/*
/&

// JOB AUDPUL                  PULL LIST, CABS AUDTØ5  CYC=COB
// EXEC TDYNLIST
TITLE=CABS PULL LIST, AUDTØ5 COB
DN='COB.BØ2AUD',JOB=AUDTØ5  COB
NOTE=2 SCRATCH TAPES FOR AUDTØ5  COB
/*
/&

// JOB AUDPUL                  PULL LIST, CABS AUDTØ5  CYC=OBL
// EXEC TDYNLIST
TITLE=CABS PULL LIST, AUDTØ5 OBL
DN='OBL.BØ2AUD',JOB=AUDTØ5  OBL
NOTE=2 SCRATCH TAPES FOR AUDTØ5  OBL
/*
/&

// JOB AUDPUL                  PULL LIST, CABS AUDTØ5  CYC=SOR
// EXEC TDYNLIST
TITLE=CABS PULL LIST, AUDTØ5 SOR
DN='SOR.BØ2AUD',JOB=AUDTØ5  SOR
NOTE=2 SCRATCH TAPES FOR AUDTØ5  SOR
/*
/&
```

JOB CONTROL STATEMENTS TO PRODUCE DYNAM/T TAPE PULL LISTS

```
// JOB AUDPUL                  PULL LIST, CABS AUDTØ6  CYC=AOC
// EXEC TDYNLIST
TITLE=CABS PULL LIST, AUDTØ6 AOC
DN='AOC.BØ9AUD',JOB=AUDTØ6  AOC
NOTE=2 SCRATCH TAPES FOR AUDTØ6  AOC
/*
/&

// JOB AUDPUL                  PULL LIST, CABS AUDTØ6  CYC=COB
// EXEC TDYNLIST
TITLE=CABS PULL LIST, AUDTØ6 COB
DN='COB.BØ9AUD',JOB=AUDTØ6  COB
NOTE=2 SCRATCH TAPES FOR AUDTØ6  COB
/*
/&

// JOB AUDPUL                  PULL LIST, CABS AUDTØ6  CYC=OBL
// EXEC TDYNLIST
TITLE=CABS PULL LIST, AUDTØ6 OBL
DN='OBL.BØ9AUD',JOB=AUDTØ6  OBL
NOTE=2 SCRATCH TAPES FOR AUDTØ6  OBL
/*
/&

// JOB AUDPUL                  PULL LIST, CABS AUDTØ6  CYC=SOR
// EXEC TDYNLIST
TITLE=CABS PULL LIST, AUDTØ6 SOR
DN='SOR.BØ9AUD',JOB=AUDTØ6  SOR
NOTE=2 SCRATCH TAPES FOR AUDTØ6  SOR
/*
/&
```

JOB CONTROL STATEMENTS TO PRODUCE DYNAM/T TAPE PULL LISTS

```
// JOB AUDPUL                PULL LIST, CABS AUDMØ7  CYC=OBL
// EXEC TDYNLIST
TITLE=CABS PULL LIST, AUDMØ7 OBL
DN='CM2ANC',JOB=AUDMØ7  OBL
DN='AH1ANC',JOB=AUDMØ7  OBL
NOTE=2 SCRATCH TAPES FOR AUDMØ7  OBL
/*
/&
```

```
// JOB AUDPUL                PULL LIST, CABS AUDM14  CYC=SOR
// EXEC TDYNLIST
TITLE=CABS PULL LIST, AUDM14 SOR
DN='EXUAVK',JOB=AUDM14  SOR
DN='AXWAVK',JOB=AUDM14  SOR
NOTE=1 SCRATCH TAPE FOR AUDM14  SOR
/*
/&
```

```
// JOB AUDPUL                PULL LIST, CABS AUDM15  CYC=SOR
// EXEC TDYNLIST
TITLE=CABS PULL LIST, AUDM15 SOR
DN='SOR.AØAAUD',JOB=AUDM15  SOR
DN='CM2ANC',JOB=AUDM15  SOR
NOTE=1 SCRATCH TAPE FOR AUDM15  SOR
/*
/&
```

```
// JOB AUDPUL                PULL LIST, CABS AUDM2Ø  CYC=SOR
// EXEC TDYNLIST
TITLE=CABS PULL LIST, AUDM2Ø SOR
DN='SOR.AØAAUD',JOB=AUDM2Ø  SOR
DN='SOR.AØ1AUD',JOB=AUDM2Ø  SOR
DN='SOR.AØ7AUD',JOB=AUDM2Ø  SOR
NOTE=2 SCRATCH TAPES FOR AUDM2Ø  SOR
/*
/&
```

1-8
DT